REG-LL_EN.book Page 1 Wednesday, September 14, 2011 12:03 PM

Riso shall not be responsible for any damage or expense that might result from the use of this manual.
As we are constantly improving our products, the machine may differ in some respects from the illustrations used in this manual.
Riso shall not be liable for any direct, incidental, or consequential damages of any nature, or losses or expenses resulting from the use of this product or included manuals.

⚠Caution:

- Make sure to read the important operational safety information.
- Store this manual close-by, and fully acquaint yourself with the printing machine.

RISO is a registered trademark of RISO KAGAKU CORPORATION in Japan and other countries.
RISO iQualitySystem™ is a trademark of RISO KAGAKU CORPORATION.
is a trademark of RISO KAGAKU CORPORATION.
Adobe® Acrobat® Reader® and Adobe® Reader® are trademarks of Adobe Systems Incorporated.

- The information contained in this document is subject to change without notice.

Copyright © 2012 RISO KAGAKU CORPORATION

REG-LL_EN.book Page 2 Wednesday, September 14, 2011 12:03 PM

Contents

Welcome to the RISO EZ Series Model 5

Getting Acquainted 6

Function and Name of Each Part 6
Control Panels 8

Before Starting to Use 12

Safety Guide - Installation 12
- Installation 12
- Power connection 13

Connection with a Computer (Option) 14
- Connection Method 14
- Software Installation 15

Paper Recommendations 16
- Size and Weight Restrictions 16
- Tips for Better Paper Feeding 17
- Storing Environment 17

Originals 18
- Size and Weight Restrictions 18
- Maximum Printing Areas and Margins 19
- Materials Not to Be Printed 19

Preparing to Print 20
- Setting up the Paper Feed Tray 20
- Adding or Replacing Paper 21
- Closing the Paper Feed Tray 21
- Setting up the Paper Receiving Tray 22

Basic Operations 26

Safety Guide - Handling and Operation 26
- Operation Environment 26
- Machine Handling 26
- Consumables 27
- Ink Handling 27
- Location of Caution Label 27

Basic Process 28
Basic Operations 29
- Printing from a Paper Document or Book 29
- Printing with Data Generated by a Computer (Optional Kit Required) 32

REG-LL_EN.book Page 3 Wednesday, September 14, 2011 12:03 PM

Setting up for Scanning Originals 34

Selecting the Image Processing Mode [Line, Photo, Duo] 34
Scanning Originals Written with Pencils [Pencil] 35
Processing Photos with Dot Screening [Dot Process] (For EZ3XX only) 36
Enlarging and Reducing Originals [Enlargement/Reduction] 37
Enlarging and Reducing by Standard Ratios [Standard] 37
Enlarging and Reducing with the Zoom Function [Zoom] (For EZ3XX only) 38
Scanning Originals Having Faint or Dark Contents [Scanning Level Adjustment] 39
Reproducing Bound Documents [Book Shadow Edit] 40
Printing Originals Side-by-Side [2-Up Printing] 41
Single-Original Printing and Two-Original Printing 41
Restrictions on 2-Up Printing 42
Operational Procedure 44
Automatic Printing [Auto-Process] 46
Saving Ink [Ink Saving] 47

Setting up for Printing 48

Producing Proof Copies [Proof] 48
Adjusting the Print Density [Print Density Adjustment] (For EZ3XX only) 49
Adjusting the Print Position [Print Position Adjustment] 50
Adjusting the Vertical Position 50
Adjusting the Horizontal Position 50
Changing the Print Speed [Print Speed Adjustment] 51

Advanced Features 52

Automatic Sorting into Groups [Program] 52
Setting Up for Programed Printing 54
Saving Programs 59
Retrieving a Program 60
Making changes to Stored Programs 61
Clearing Programs 62
Idling Action [Idling] 64
Protecting Confidential Documents [Confidential Mode] 65
Customizing the Initial Settings [Custom Setting Mode] 66
Operation Procedure 73
IP Address Setting 75
Setting Up User Management 77
Registering Administrator/Users [Create User] 78
Setting Up the Management ON/OFF 80
Suspend a user 81
Setting the Upper Limit of the User's Usage 82
Clearing the TC or MC for each user 83
Reset all User Counters 84
Setting the ID Counter Report Reminder 85
Output the ID Counter Report 86
Clearing all User Management Function Settings 87

REG-LL_EN.book Page 4 Wednesday, September 14, 2011 12:03 PM

Replacing and Disposing Consumables 88

Replacing the Ink Cartridge 88
Replacing the Master Roll 90
Emptying the Master Disposal Box 93
Disposal of Depleted Consumables 95
Removing and Installing the Print Drum (Cylinder) 96

Cleaning 98

Safety Guide - Cleaning 98
Cleaning 99
- Thermal Print Head 99
- Glass Platen and Platen Cover 99
- Scanner Glass and White Roller of the ADF unit (Option) 100
- Pressure Roller 100
- Printer Exterior 101

Troubleshooting 102

Check & Error Display 102
- Checking with the Check & Error Display 102

Troubleshooting Tips 112

Appendixes 122

Optional Accessories 122
Specifications 123
Feature List 130
Index 134

REG-LL_EN.book Page 5 Wednesday, September 14, 2011 12:03 PM

Welcome to the RISO EZ Series Model

Thank you for purchasing this printing machine that produces clear prints with easy key operations. Besides many useful functions as a printer, the machine provides you with various conveniences such as Progressive Arrow indicators that show the progress of the master-making and printing processes and the Receiving Tray Paper Guide that allow you to easily pick up printed copies.

About This User's Guide

This machine comes with the following three user's guides.

- **RISO EZ Series User's Guide (this manual)**
  This user's guide explains the machine's operations via various functions and handy tips. It also contains user cautions, information on storing and changing consumables, and troubleshooting procedures.
- **RISO Printer Driver User's Guide (included as a PDF file in the attached CD-ROM)**
  This user's guide explains the procedures for printing from a computer.
- **RISO Utility Software User's Guide (included as a PDF file in the attached CD-ROM)**
  This user's guide explains how to use the software of the "RISO COPY COUNT VIEWER" and "RISO USB PRINT MANAGER".

About the notation in an explanatory note

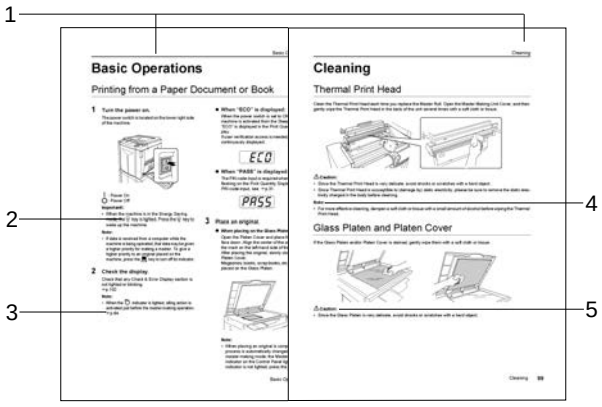

1) Chapter Title

2) Control panel key
The pictogram in a sentence designates a key on the control panels.

3) Cross-reference Remark (☞)
Shows a reference page.

4) Advice Remark
Important!:Provides such information as those that should be paid special attention and inhibited performances.
Note: Gives you useful information.
Tip: Gives you additional hints for more convenience.

5) Safety Remark
Safety instructions are described under the following icons.

⚠WARNING:
⚠Caution:

About Information and Illustrations on This Manual

Keep the following in mind about information and illustrations in this manual.

- Some functions described in this manual are supported only by the EZ3XX; those are unavailable on the EZ2XX.
- For the illustrations of the machine's outlines and control panels, those for the EZ371A have been used.
- The optional Auto Document Feeder AF-VI is referred to as the "ADF unit (Option)".

REG-LL_EN.book Page 6 Wednesday, September 14, 2011 12:03 PM

Getting Acquainted

Function and Name of Each Part

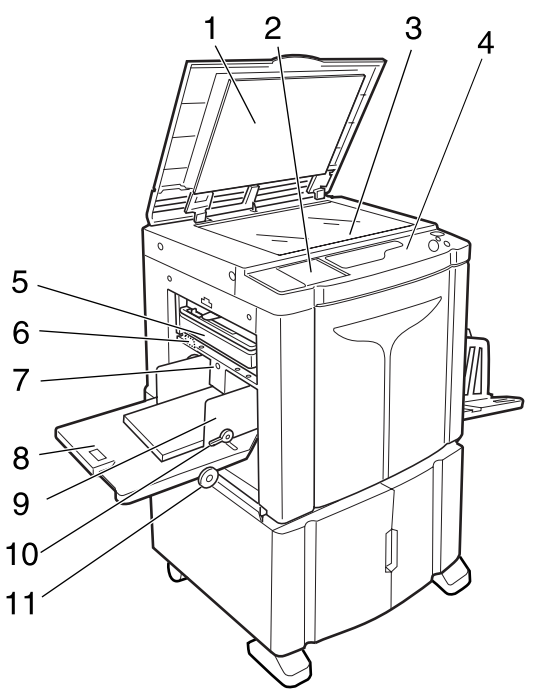

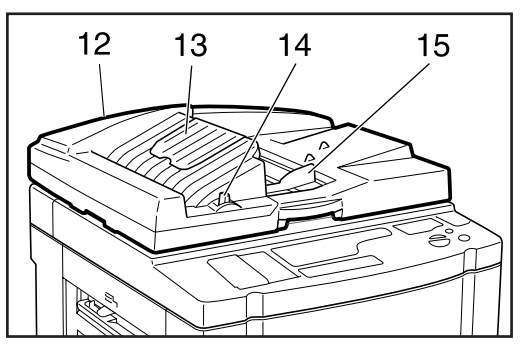

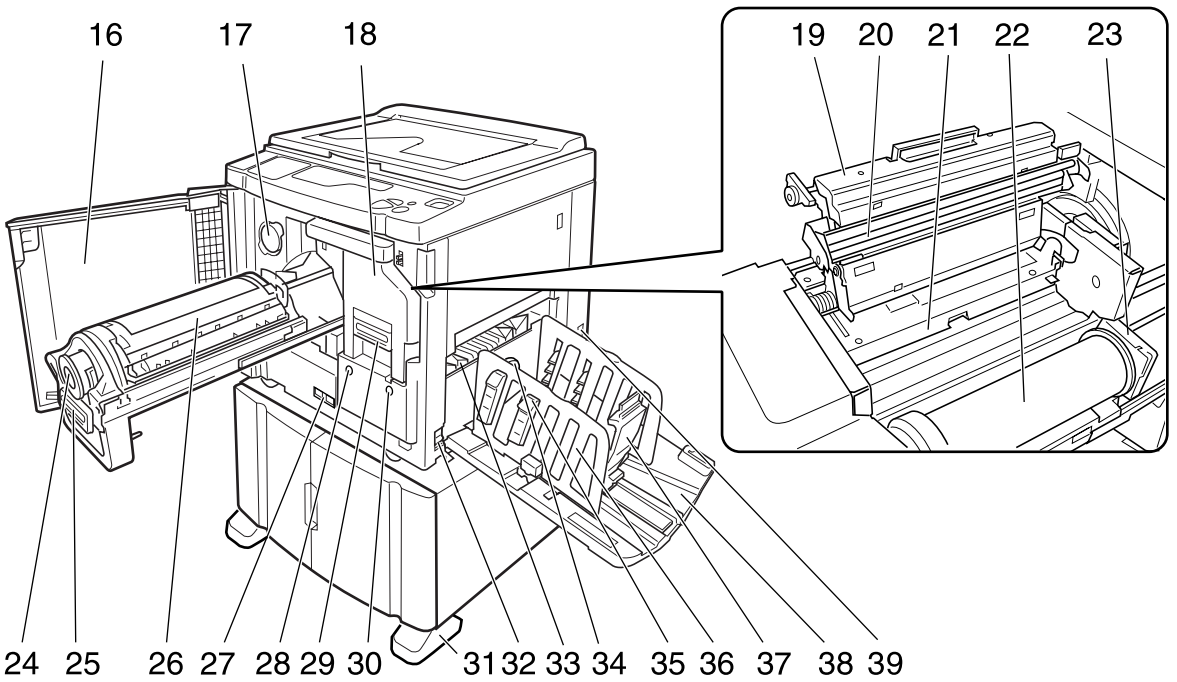

REG-LL_EN.book Page 7 Wednesday, September 14, 2011 12:03 PM

1) Platen Cover
Opened and closed when placing the original.

2) Sub Control Panel (☞p.10)

3) Glass Platen (☞p.99)
Place an original face down.

4) Main Control Panel (☞p.8)

5) Master Disposal Box (☞p.93)
Holds discarded masters.

6) Paper Feed Pressure Adjustment Lever (☞p.20)
Adjusts the paper feed pressure according to paper in use.

7) Feed Tray Ascent/Descent Button (☞p.21)
Lowers or raises the Paper Feed Tray when changing or adding paper.

8) Paper Feed Tray (☞p.20)

9) Feed Tray Paper Guides (☞p.20)
Hold and guide paper.
Slide to fit to the sides of paper.

10) Feed Tray Paper Guides Lock Lever (☞p.20)
Lock the Feed Tray Paper Guides.

11) Horizontal Print Position Adjustment Dial (☞p.50)
Move the print position to the left or right.

12) Auto Document Feeder (Option)
The Feeder can hold approximately 50 sheets of the original sheets (80 g/m^2 (21-lb bond)). Place the original face-down.

13) ADF Original Receiving Tray
Scanned originals are ejected into this tray.

14) ADF Original Release Lever (☞p.106)
If an original is jammed, pull this lever to the right to eject from the ADF unit.

15) ADF Original Guides
Slide and adjusts to the width of the original to hold together.

16) Front Cover

17) Ink Cartridge Cap Holder (☞p.88)

18) Master Making Unit (☞p.90)

19) Master Making Unit Cover (☞p.90)

20) Thermal Print Head

21) Master Guide Flap (☞p.90)

22) Master Roll (☞p.90)

23) Master Roll Holder (☞p.90)

24) Ink Cartridge (☞p.88)

25) Print Drum (Cylinder) Handle (☞p.96)

26) Print Drum (Cylinder) (☞p.96)

27) Counter
Counts the number of copies (total print counter) and the number of made masters (master counter).

28) Print Drum (Cylinder) Release Button (☞p.96)
Unlocks the Print Drum (Cylinder) for removal.

29) Master Making Unit Handle (☞p.90)

30) Master Making Unit Release Button (☞p.90)
Unlocks the Master Making Unit for removal.

31) Stabilizer

32) Power Switch

33) Paper Jump Wing
Automatically adjusts to keep printed paper neatly stacked.

34) Paper Jumping Wing Adjustment Dial (For EZ3XX only) (☞p.22)
Adjusts according to the finish and size of paper in order to align printed paper.

35) Paper Arranger (For EZ3XX only) (☞p.22)
Press to open for aligning printed paper.

36) Receiving Tray Paper Guides (☞p.22)
Align printed paper neatly.
Slide according to the width of paper to be printed.

37) Paper Stopper (☞p.22)
Stops paper printed and ejected into the Paper Receiving Tray.
Slide according to the length of paper to be printed.

38) Paper Receiving Tray (☞p.22)

39) AC inlet
Do not touch the POWER switch on the upper part of the AC inlet (power cord connection). Changing the POWER switch setting by mistake will cause damage.

REG-LL_EN.book Page 8 Wednesday, September 14, 2011 12:03 PM

Control Panels

Main Control Panel

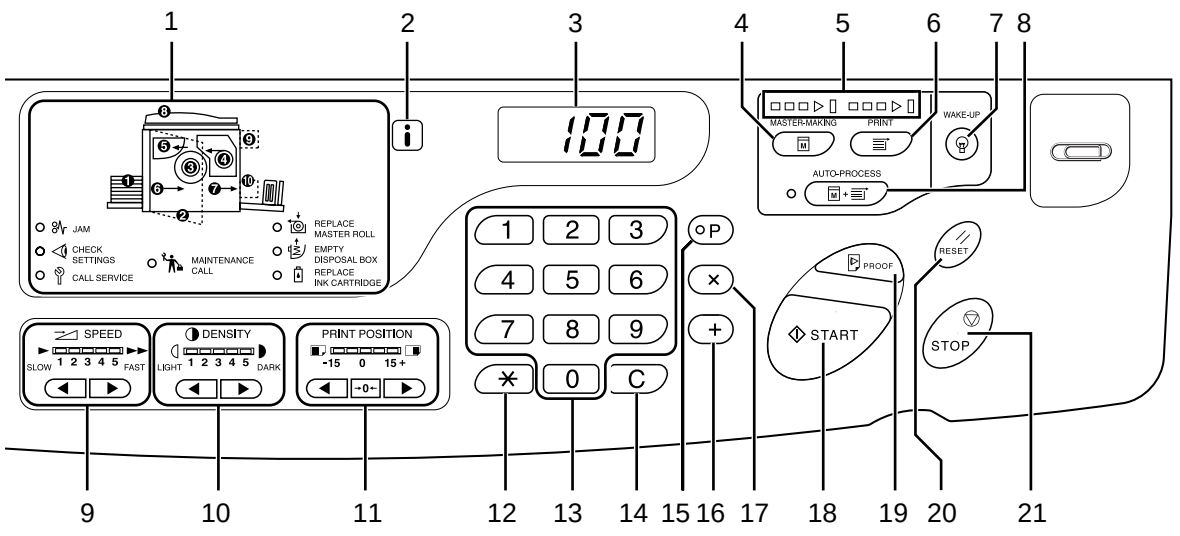

1) Check & Error Display (☞p.102)
Indicates error locations and status.

2) ⓘ indicator

3) Print Quantity Display (Error number display)
Shows the number of printed copies, numeric values entered for various settings, and error numbers.

4) Master-Making Key
Makes the printer be ready for making masters.

5) Progress Arrows
Indicates master-making and printing progress status.
When making masters is ready, all the indicators above the Master-Making Key light.
When printing is ready, all the indicators above the Print Key light.

6) Print Key
Makes the printer be ready for printing.

7) Wake-Up Key / Logout Key
Wakes up the printer in Energy Saving mode.
Use this key also to log out from the machine.

8) Auto-Process Key/Indicator (☞p.46)
Performs non-stop operation from master-making through printing.
When activated, the indicator besides the key lights.

9) Print Speed Adjustment Keys/Indicator (☞p.51)
Selects the print speed from five levels.
The indicator above the keys shows the current speed level.

10) Print Density Adjustment Keys/Indicator (For EZ3XX only) (☞p.49)
Selects the print density from five levels.
The indicator above the keys shows the current density level.

11) Vertical Print Position Adjustment Keys/ Indicator (☞p.50)
Adjusts the print position in the vertical direction (within ±15 mm (±1/2")) after making a master.
The indicator above the keys shows the offset amount from the center.
To clear the offset amount, press →**0**←.

12) ✳ Key
Use when setting up for programed printing.

13) Print Quantity Keys (0 to 9 Keys)
Use to enter the number of copies to be printed or to enter other numeric values.

14) C Key
Cancels entered numeric values or resets the counter to zero.

15) P Key/Indicator (☞p.52)
Allows the printer to print and group copies as specified (programed printing).
When activated, the indicator above the key lights.

REG-LL_EN.book Page 9 Wednesday, September 14, 2011 12:03 PM

16) + Key

Use when setting up for programed printing or when changing the initial settings.

17) × Key

Use when setting up for programed printing.

18) Start Key

Starts master-making or printing process or executes specified operations.
The key is lighted only when the key is active.

19) Proof Key (☞p.48)

Use to check print result after adjusting the print position, for example.
This allows you to print proof copies without affecting the value on the Print Quantity Display.

20) Reset Key

Returns all settings to the initial settings.

21) Stop key

Stops operation in progress.

REG-LL_EN.book Page 10 Wednesday, September 14, 2011 12:03 PM

Sub Control Panel

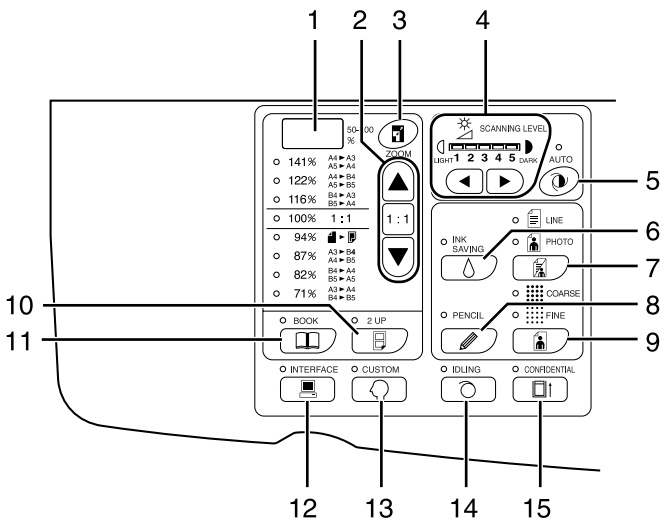

1) Free Reproduction Size Display (For EZ3XX only) (☞p.38)

Shows the enlargement/reduction ratio specified using the zoom function.

2) Reproduction Size Selection Key (☞p.37)

When selecting from among the standard reproduction sizes, press ▲/▼ to switch the selection. The corresponding indicator lights to indicate the current selection.
To restore 100%, press 1 : 1.

3) Zoom Key (For EZ3XX only) (☞p.38)

Allows you to change the reproduction size in the range from 50% to 200%.
After pressing , you can change the size in increments of 1% using the selection keys.
Each time you press the key, the function is switched on and off.

4) Scanning Level Adjustment Keys/ Indicator (☞p.39)

Select from five scanning levels.
The indicator above the keys shows the current scanning level.

5) Auto Scanning Level Adjustment Key/ Indicator (☞p.39)

Automatically selects the optimum scanning level for the current original.
Each time you press the key, the function is switched on and off.
When activated, the indicator above the key lights.

6) Ink Saving Key/Indicator (☞p.47)

Makes the printer save ink.
Each time you press the key, the function is switched on and off.
When activated, the indicator above the key lights.

7) Image Processing Selection Key/Indicator (☞p.34)

Each time you press the key, the Image Processing mode is changed.
When the Line mode is selected, lights. When the photo mode is selected, lights. When the Duo(text/photo) mode is selected, both and light.

8) Pencil Key/Indicator (☞p.35)

Select for an original written using a pencil.
Each time you press the key, the function is switched on and off.
When activated, the indicator above the key lights.

9) Dot Screen Selection Key/Indicator (For EZ3XX only) (☞p.36)

Adjusts shade in pictures when printing.
Each time you press the key, the selection is switched among (COARSE) → (FINE) → and no shade. The corresponding indicator lights depending on the selection.

10) 2-UP Key/Indicator (☞p.41)

Allows side-by-side printing with a single paper.
Each time you press the key, the function is switched on and off.
When activated, the indicator above the key lights.

11) Book Key/Indicator (☞p.40)

Use when placing a magazine or book as an original for printing.
Each time you press the key, the function is switched on and off.
When activated, the indicator above the key lights.

REG-LL_EN.book Page 11 Wednesday, September 14, 2011 12:03 PM

12) Interface Key/Indicator (☞p.32)

When connected with a computer (optional kit needed), switches between line connection and disconnection.

When the line is in connection, the indicator above the key lights.

13) Custom Key/Indicator (☞p.66)

Use when changing the initial settings.

When activated, the indicator above the key lights.

14) Idling Key/Indicator (☞p.64)

Sets up for idling.

Each time you press the key, the function is switched on and off.

When activated, the indicator above the key lights.

15) Confidential Key/Indicator (☞p.65)

Prevents confidential documents from being copied.

Each time you press the key, the function is switched on and off.

When activated, the indicator above the key lights.

REG-LL_EN.book Page 12 Wednesday, September 14, 2011 12:03 PM

Before Starting to Use

Safety Guide - Installation

This section describes the precautions to be observed when installing the machine. Read this section before installing the machine.

Note:

- Your dealer (or authorized service representative) will help you to determine a proper location for the machine at the time of delivery.

Installation

⚠WARNING:

- Place the machine on the dedicated stand for this model or on a flat and stable surface (maximum of 10 mm ($^3/_8$ inches) differential allowed). Injury might occur if the machine falls.
- Install the machine in a well-ventilated area. Failure to do so may result in serious health problems.

⚠Caution:

- Install the machine near the electrical outlet to avoid using an extension cord between the machine and the electrical outlet. If an extension cord is absolutely required, do not use one longer than 5 m (15 feet).
- Allow at least 10 cm (4 inches) or more of clearance behind the machine so that you can unplug the machine in case of technical difficulties.
- Keep the machine away from dusty environments. Failure to do so may result in fire.

Important!:

- Avoid installing the machine in the locations listed below. Failure to observe this precaution may lead to machine failure.
  - Locations with exposure to direct sunlight, such as locations close to windows (Curtain all windows that might expose the machine to direct sunlight)
  - Locations that are subject to sudden changes in temperature
  - Extremely hot and humid locations or cold and dry locations
  - Heated locations
  - Locations exposed to direct cold air, direct hot air, or direct radiant heat
  - Locations of poor permeability and ventilation

REG-LL_EN.book Page 13 Wednesday, September 14, 2011 12:03 PM

Power connection

⚠WARNING:

- Do not overload the electrical outlet or extension cord, nor damage the power cord by placing heavy objects on it or pulling or bending it. This can result in fire or electric shock.
- Do not pull the power cord but hold the plug itself when unplugging it. This can damage the cord and result in fire or electric shock.
- Do not plug or unplug the power cord if your hands are wet. This can result in electric shock.

⚠Caution:

- Pull out the power cord plug from the electrical outlet more than once a year and clean the prongs of the plug and their surroundings. Dust collected on these areas can result in fire.

Important!:

- Check the power cord and plug for poor connections. Plug the power cord securely into a nearby electrical outlet.
- Be sure to turn off the POWER switch when connecting or disconnecting a cable.
- Do not touch the POWER switch on the upper part of the AC inlet (power cord connection). Changing the POWER switch setting by mistake will cause damage.

REG-LL_EN.book Page 14 Wednesday, September 14, 2011 12:03 PM

Connection with a Computer (Option)

With an optional interface board (RISO PC Interface Card USB2.0) installed, you can directly send data from a connected computer to the machine as an original for printing. Because digital data itself is used for making a master, the finish of prints becomes outstanding.

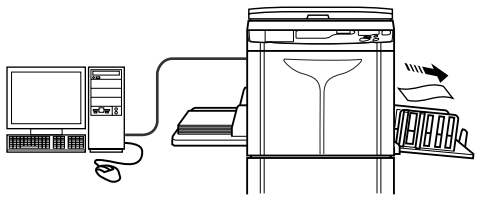

Connection Method

- **One-to-one connection with a Windows PC**

  - Cable:
    USB cable
    Less than 3m (10 feet) Hi-Speed USB

  Important!:

  - Before making the USB connections, turn on both the machine and computer, and wait until the initial screen is displayed.
  - The maximum allowable voltage for USB connector input and output is 5 V.
  - For the USB connections, use a commercially available USB cable (that conforms to the USB 2.0 standard).

  Note:

  - The RISO PC Interface Card USB2.0 (option) is required.

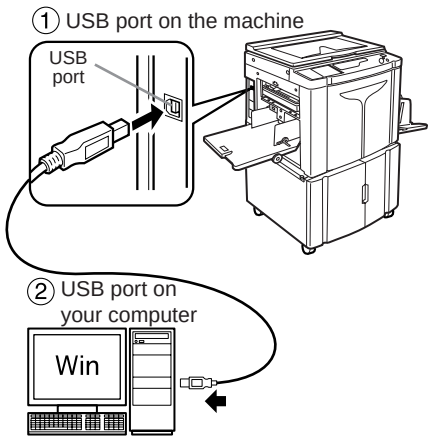

- **Network connections**

  - Cable:
    Ethernet cable
    Shielded cable that supports 10BASE-T or 100BASE-TX

  Important!:

  - Before making the Ethernet connections, turn off both the machine and computer.

  Note:

  - The RISO PC Interface Card USB2.0 and the RISO Network Card (both options) are required.
  - If the optional network interface card “RISO Network Card” is installed, the machine can be connected with a Macintosh computer. For details, see the User’s Guide of RISO Network Card.

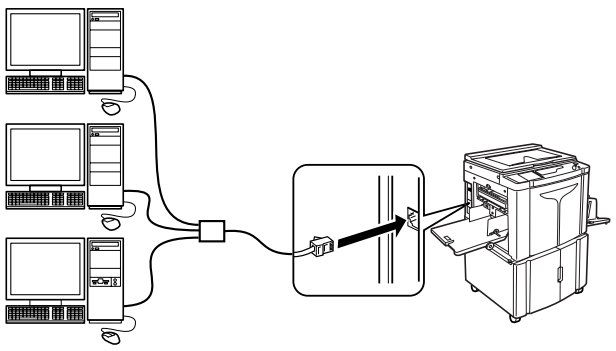

REG-LL_EN.book Page 15 Wednesday, September 14, 2011 12:03 PM

Software Installation

Before printing from a computer connected to the machine via a USB cable, the RISO printer driver must be installed. Before printing from a computer connected to the machine via a network, both the RISO printer driver and RISO Network Card must be installed. Refer to the Printer Driver User's Guide and RISO Network Card User's Guide for instructions on installation.

Note:

- RISO Network Card is an option.
  The software supplied with this machine is as follows:

● RISO Printer Driver

RISO Printer Drivers are for use with RISO Printers only.
Before setup, be sure to read the User's Guide carefully.
The User's Guide can be found as a PDF file* in the CD-ROM which came with the RISO Printer.

*To be able to view PDF format files, it is necessary for either Adobe® Reader® or Adobe® Acrobat® Reader® to be installed.
Adobe® Reader® or Adobe® Acrobat® Reader® software can be freely downloaded from the Adobe website (http://www.adobe.com/).

● RISO Utility Software

The software package includes the "RISO USB PRINT MANAGER" and "RISO COPY COUNT VIEWER".

- "RISO USB PRINT MANAGER"
  Application that manages the original data stored in the USB Flash Drive on the computer.
- "RISO COPY COUNT VIEWER"
  Application that manages the counter data (number of prints, masters, etc.) output to the USB Flash Drive on the computer.

REG-LL_EN.book Page 16 Wednesday, September 14, 2011 12:03 PM

Paper Recommendations

Size and Weight Restrictions

The table shows the specifications of the usable print paper.

Model	Usable Printing Paper	
	Size	Weight
EZ391/EZ371/EZ331/EZ301	100 mm × 148 mm ($3^{15}/_{16}$" × $5^{27}/_{32}$") to 310 mm × 432 mm ($12^{3}/_{16}$" × 17")	46g/m² (12-lb bond) to 210g/m² (110-lb index)
EZ231/EZ221/EZ201		46g/m² (12-lb bond) to 157g/m² (87-lb index)

Important!:

- Even when using paper whose sizes and weight are supported by the machine, it may not pass through the machine depending on such factors as paper finish, ambient conditions, and storage conditions. For more information, consult your dealer (or authorized service representative).

Do not use the following types of paper, as they can cause jams or misfeeds:

- Extremely thin paper (less than 46 g/m² (12-lb bond))
- Extremely thick or heavy paper (greater than 210 g/m² (110-lb index) for EZ3 series or greater than 157 g/m² (87-lb index) for EZ2 series)
- Wrinkled, curled, folded, or torn paper
- Chemically treated or coated paper (such as thermal or carbon paper)
- Paper having a sticky section or holes (such as an envelope and label paper)

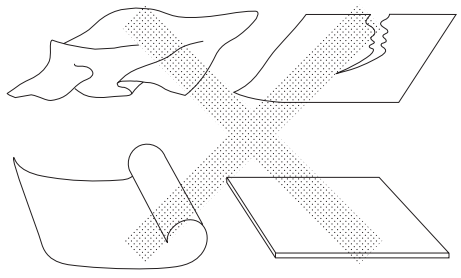

Note:

- Paper with a horizontal grain direction can cause problems with paper supply. Use paper with a vertical grain direction.
- Images are not output onto the entire area of usable print paper. The maximum printing areas differ among models. ☞p.19
- When using poorly cut paper or coarse surfaced paper (drawing paper, etc.), arrange the paper neatly before use.
- Depending on the type of paper used, paper dust may be generated when using the machine. Please clean and ventilate the area adequately.

RISO does not assure that paper outside the above specifications pass through the machine and can be used for printing.

REG-LL_EN.book Page 17 Wednesday, September 14, 2011 12:03 PM

Tips for Better Paper Feeding

To prevent paper jams and misfeeds, follow the directions below:

- When using standard or light-weight paper, set the Paper Feed Pressure Adjustment Lever to “NORMAL” ( ). Then set the Paper Jumping Wing Adjustment Dial (For EZ3XX only) according to the paper size and open all four Paper Arrangers (For EZ3XX only). For EZ2XX, set the corrugators. ☞p.20
- When using thick paper (such as card stock), set the Paper Feed Pressure Adjustment Lever and the Paper Jumping Wing Adjustment Dial to “CARD” ( ), and open the two inner Paper Arrangers. ☞p.20
- When using slippery paper, set the Paper Feed Pressure Adjustment Lever to “CARD” ( ). ☞p.20
- Slide the Feed Tray Paper Guides, Receiving Tray Paper Guides, and Paper Stopper to fit the paper size. ☞p.20
- Use flat printing paper that is free of folds. If curled paper is unavoidable, place the printing paper so that the inner curled part faces down.
- Paper may stick to the Print Drum (Cylinder) surface if the top margin is too narrow on the original or if the upper portion of the original uses a large amount of ink. To solve this problem, lower the print position to provide a wider top margin or reverse the top and bottom of the original. Then restart printing from the beginning.

Storing Environment

Store printing paper in a level, dry area. Storing the paper in an excessively humid area can result in paper jams or poor print quality.
After unpacking printing paper, keep the remaining paper wrapped and store it in a moisture-proof box. It is highly recommended to put silica gel in the paper storage box.

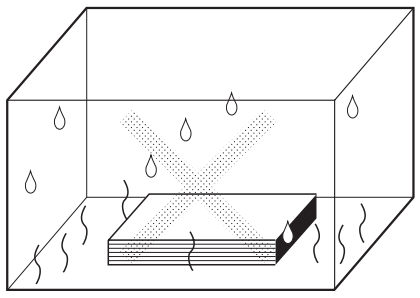

REG-LL_EN.book Page 18 Wednesday, September 14, 2011 12:03 PM

Originals

Size and Weight Restrictions

Usable originals are as follows.

Using the Glass Platen		Using the Optional ADF unit	
Size	**Weight**	**Size**	**Weight**
50 mm × 90 mm($1^{31}/_{32}$" × $3^{9}/_{16}$") to 310 mm × 432 mm($12^{3}/_{16}$" × 17")	Max.10kg (22lb)	100 mm × 148 mm($3^{15}/_{16}$" × $5^{27}/_{32}$") to 310 mm × 432 mm($12^{3}/_{16}$" × 17")	50g/m² (13-lb bond) to 128g/m² (34-lb bond)

- Originals are scanned according to the size of paper placed on the Paper Feed Tray when masters are made; for the same width, the positions of the Feed Tray Paper Guides.
  When the placed paper is smaller than an original, not the entire original will be scanned.
  When the placed paper is larger than an original, dirt on the glass or shade of the original, for example, may result in unexpected dirt in the area beyond the size of the original.
- Bound originals can also be used on the Glass Platen.
- You can feed automatically up to 50 originals when using the ADF unit (Option). (When originals of 80 g/m² (21-lb bond) or less are used).

Note:

- Use the Glass Platen when printing the following originals:
  - Patched or worn originals
  - Wrinkled, curled, folded, or torn originals
  - Transparent originals (such as tracing paper or OHP transparencies)
  - Chemically treated originals (such as thermal or carbon paper)
  - Originals with correction fluid or glue
  - Extremely thin originals (less than 50 g/m²(13-lb bond))
  - Extremely thick originals (greater than 128 g/m²(34-lb bond))
  - Heavy drawing paper
  - Originals with staples or clips
- If an original is wrinkled, curled, or creased flatten it thoroughly so that the originals can be pressed directly onto the Glass Platen during processing.
- If correction fluid or glue is used on an original, thoroughly dry it before placement.
- For an original patched with thick paper, the shade of the patched paper may also be printed.

REG-LL_EN.book Page 19 Wednesday, September 14, 2011 12:03 PM

Maximum Printing Areas and Margins

The maximum printing areas are as follows.

Model	Maximum Printing Area	Usable Maximum Print Paper Size
EZ391	291 mm × 425 mm ($11^{7}/_{16}$" × $16^{3}/_{4}$")	310 mm × 432 mm ($12^{3}/_{16}$" × 17")
EZ371	291 mm × 413 mm ($11^{7}/_{16}$" × $16^{1}/_{4}$")	
EZ331 EZ231	251 mm × 357 mm ($9^{7}/_{8}$" × $14^{1}/_{16}$")	
EZ301 EZ201	210 mm × 290 mm ($8^{1}/_{4}$" × $11^{7}/_{16}$")	
EZ221	210 mm × 357 mm ($8^{1}/_{4}$" × $14^{1}/_{16}$")	

Important!:

- No matter which size of originals is printed, the margins indicated on the figure are required for the originals. Reduce the original if necessary to fit it inside of the margins. Place an original so that its end having a 5 mm($^{3}/_{16}$") margin at least comes to the left of the Glass Platen.

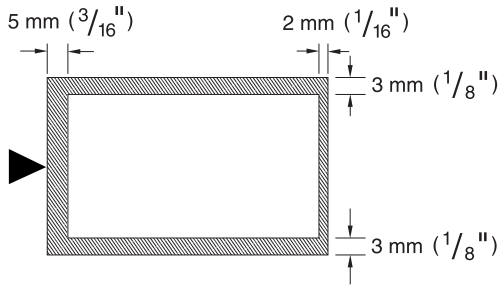

Materials Not to Be Printed

Do not use the machine in any manner which violates the law or infringes on established copyrights, even when making copies for personal use. Consult your local authorities for further details. In general, use discretion and common sense.

REG-LL_EN.book Page 20 Wednesday, September 14, 2011 12:03 PM

Preparing to Print

Setting up the Paper Feed Tray

1 Open the Paper Feed Tray.

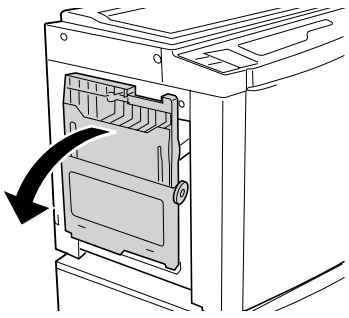

2 Load paper.

Place paper in the printing orientation, and slide the Feed Tray Paper Guides to fit to the sides of the paper. Then turn the right and left Feed Tray Paper Guide Levers to lock the guides.

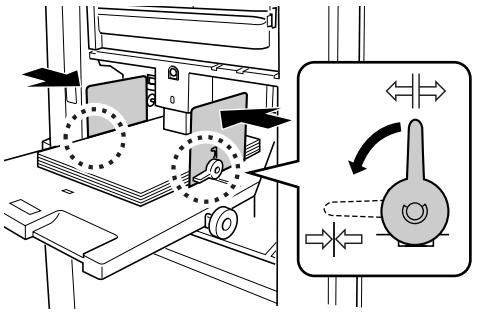

⇦|⇨ :Unlock
⇨✳⇦ :Lock

Important!:

- Do not use paper of inappropriate sizes or mix paper of different sizes.
- Before sliding the Feed Tray Paper Guides, position its lock lever to ⇦|⇨ .
- Make sure that the Feed Tray Paper Guides fit tight up against the paper.
  Failure to do so can produce undesired results.

3 Select the paper feed pressure.

Position the Paper Feed Pressure Adjustment Lever according to the finish of the paper.

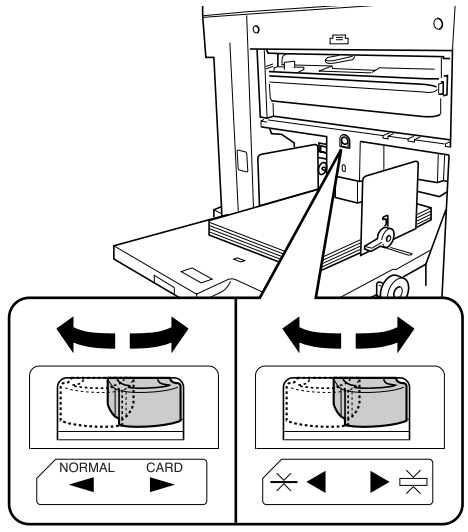

NORMAL (✳):For standard paper
CARD (▭):For thick or smooth-surface paper

REG-LL_EN.book Page 21 Wednesday, September 14, 2011 12:03 PM

Adding or Replacing Paper

When you add paper or replace with paper of a different size at the time of printing, press the Feed Tray Ascent/ Descent Button to lower the Paper Feed Tray.

- The Paper Feed Tray is lowered while you press and hold the button, and when you release the button, the tray stops at that position.
- When the tray runs out of paper or you remove all paper, the tray is automatically lowered to the bottom.

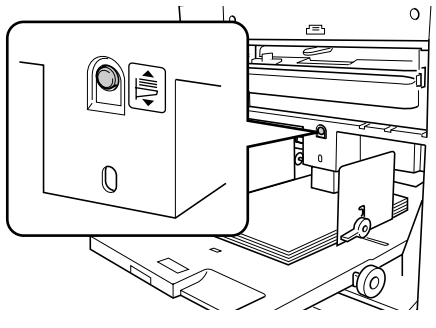

Important!:

- When changing to a different paper size, remember to readjust the Receiving Tray Paper Guides and Paper Stopper. ☞p.22
- When changing to a different quality paper, remember to adjust the Paper Feed Pressure Adjustment Lever.

Closing the Paper Feed Tray

Before closing the Paper Feed Tray, remove the paper and widen the Feed Tray Paper Guides to the limits. Then close the Paper Feed Tray.

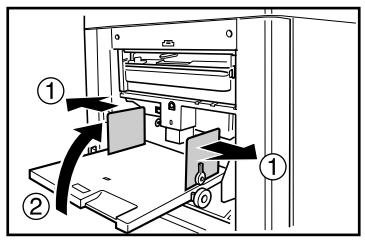

REG-LL_EN.book Page 22 Wednesday, September 14, 2011 12:03 PM

Setting up the Paper Receiving Tray

1 Open the Paper Receiving Tray.

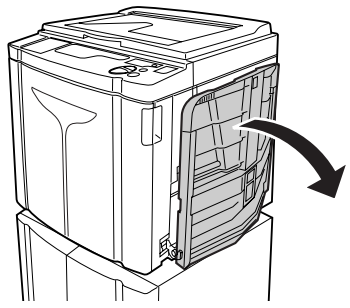

Pull the Paper Receiving Tray down until it comes to a rest.

2 Position the Receiving Tray Paper Guides.

1) Raise the Receiving Tray Paper Guides.
2) Hold their lower part and slide them to fit the paper width.

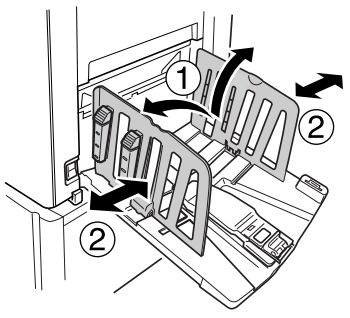

Important!:

- For thick paper such as drawing paper, position the Receiving Tray Paper Guides a little wider than the actual paper width.
- When you move the Paper Feed Tray using the Horizontal Print Position Adjustment Dial, reposition also the Receiving Tray Paper Guides. If the guides are not correctly positioned, a problem such as a paper jam can occur.

3 Set the Paper Stopper.

1) Raise the Paper Stopper.
2) Slide to fit the length of the paper.

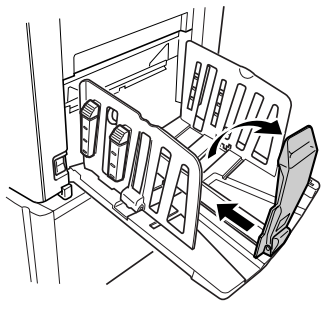

The subsequent steps differ depending on the models.

- For EZ3XX, go to step 4.
- For EZ2XX, go to step 6.

4 Adjust the Paper Arrangers. (For EZ3XX only)

Alignment of paper is affected by sizes and strength of paper. Adjust the Paper Arrangers so that printed paper is aligned.

- **For plain paper**

  Press to open all of the four Paper Arrangers.

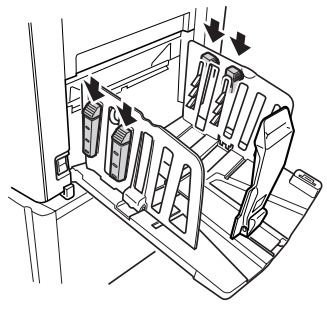

REG-LL_EN.book Page 23 Wednesday, September 14, 2011 12:03 PM

- **For plain paper with images lopsided on page**
  Press to open the two Paper Arrangers on the more heavily printed side.

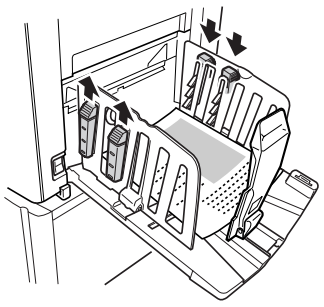

- **For thick paper**
  Press to open the two Paper Arrangers (right and left) closer to the machine.

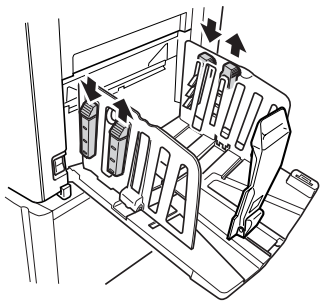

5 Adjust the Paper Jumping Wing. (For EZ3XX only)

Adjust the Paper Jumping Wing Adjustment Dial according to the type and width of the paper loaded in the Paper Feed Tray.

- **For plain paper widths larger than Letter, or equal to or larger than B4**
  Set to ✳ Ledger or ✳ A3 B4.

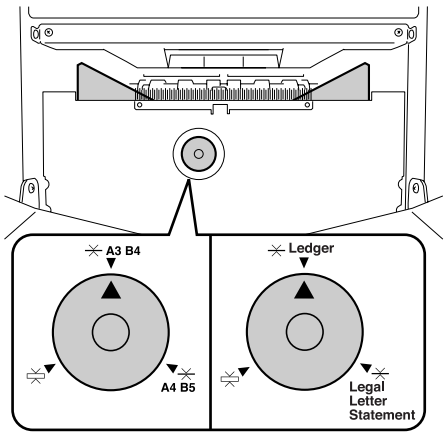

- **For plain paper widths that are either equal to or smaller than Letter or that are smaller than B4**
  Set to ✳ Legal Letter Statement or ✳ A4 B5.

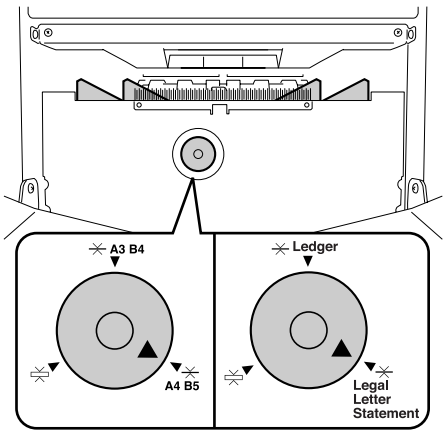

- **For thick paper**
  Set to ✳ regardless of the paper size.

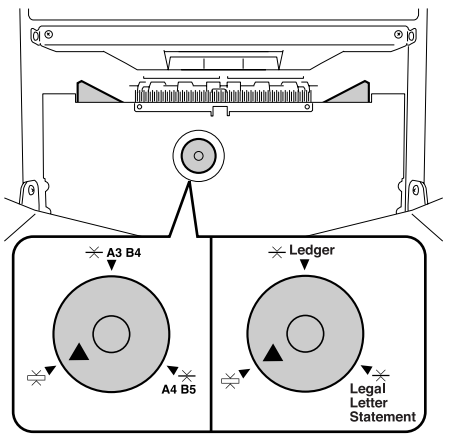

REG-LL_EN.book Page 24 Wednesday, September 14, 2011 12:03 PM

6 Set the corrugators. (For EZ2XX only)

Lower the corrugators to the inside of the Paper Guides.

Note:

- Usually the corrugators should be lowered. When using thick paper, you do not need to lower the corrugators.

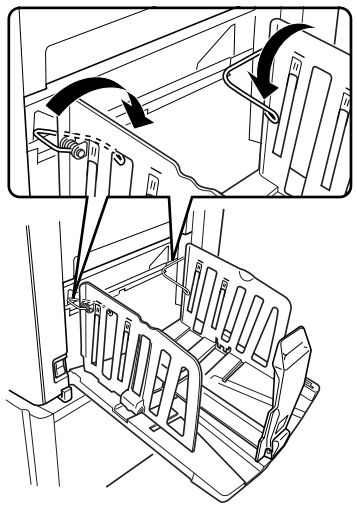

- **Closing the Paper Receiving Tray (For EZ3XX only)**

  When closing the Paper Receiving Tray, first slide the Paper Stopper to the edge of the tray and fold it inward. Then widen the Receiving Tray Paper Guides with the Paper Arrangers closed and fold the guides inward. Lastly close the Paper Receiving Tray.

1

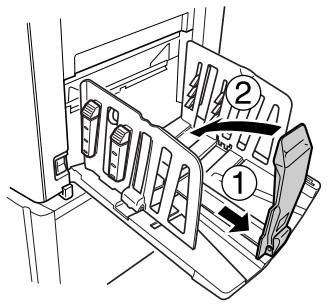

2

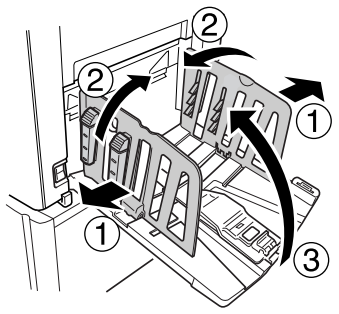

REG-LL_EN.book Page 25 Wednesday, September 14, 2011 12:03 PM

- **Closing the Paper Receiving Tray (For EZ2XX only)**

  When closing the Paper Receiving Tray, first slide the Paper Stopper to the edge of the tray and fold it inward. Then raise the corrugators, widen the Receiving Tray Paper Guides, and fold the guides inward. Lastly close the Paper Receiving Tray.

1

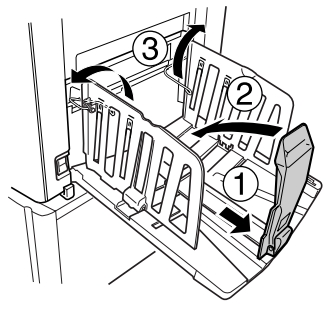

2

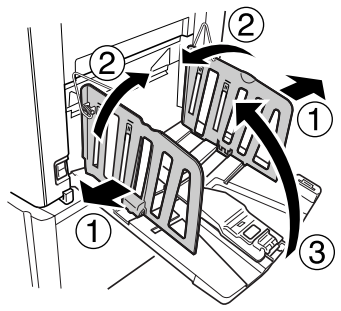

REG-LL_EN.book Page 26 Wednesday, September 14, 2011 12:03 PM

Basic Operations

Safety Guide - Handling and Operation

This section describes the precautions to be observed when handling the machine. Read this section before operating the machine.

Operation Environment

Important!:

- Operate the machine under the following appropriate environment conditions.
  Temperature range: 15°C to 30°C(59°F to 86°F)
  Humidity range: 40% to 70% (noncondensing)

Machine Handling

⚠WARNING:

- Do not place water containers or metallic objects on the machine. Fire or electric shock may occur if water or metallic objects fall into the machine.
- Do not use combustible spray and flammable solvent near the machine.
  If sprayed gas and flammable solvent contact electronic components inside the machine, fire or electric shock might occur.
- Do not insert any metallic material or flammable substance into the machine through any opening. This can result in fire or electric shock.
- Do not remove machine covers. Exposing internal parts may result in electric shock.
- Do not disassemble or rebuild the machine by yourself. This can result in fire or electric shock.
- If the machine emits excessive heat, smoke or foul odor, immediately turn off the POWER, unplug the power cord and contact your dealer (or authorized service representative). Failure to do so can result in fire or electric shock.
- If something drops inside the machine, immediately turn off the POWER, unplug the power cord and contact your dealer (or authorized service representative). Failure to do so can result in fire or electric shock.
- Never stick your hands or fingers in the openings of the machine during operation.
- Keep loose clothing or long hair away from moving parts to avoid becoming entangled.
- Do not place heavy objects on the machine. The objects might fall and cause injury.
- Contact your dealer (or authorized service representative) before moving the machine.

⚠Caution:

- Never insert fingers, etc. into the openings around Paper Feed Tray and Paper Receiving Tray. This can result in injury.
- Because ink may have stuck to areas around the Print Drum (Cylinder) or inside the machine when the Print Drum (Cylinder) was removed, be careful not to contact them with your hands or clothes.
  When ink has stuck to your hands, etc., wash it off with detergent as soon as possible.
- When you remove paper by inserting a hand inside the machine, be careful not to touch the paper separation hook. Because the tip of paper separation hook is sharp, it might cause injury.
- Do not open any covers or move the machine during operation.
- Unplug the power cord, if you do not use the machine for a long time.

REG-LL_EN.book Page 27 Wednesday, September 14, 2011 12:03 PM

- The machine has precision parts and driving parts inside. Do not handle the machine in other ways than described in this guide.
- Do not apply any shock to the machine.
- Do not stand the Print Drum (Cylinder) vertically. Doing so may pollute the floor, etc.

Important!:

- Do not unplug the power cord or turn off the power during operation.
- Be sure to open and close all machine covers gently.

Consumables

Important!:

- For ink and master Roll, it is recommended to use the products specified by RISO.
- Store consumables such as master Roll and ink properly.
  Do not store consumables in the following places:
  - Locations that are subject to direct sunlight or bright locations that are close to windows (If there is no other choice, curtain the window.)
  - Locations that are subject to rapid changes in temperature
  - Extremely hot and humid locations or extremely cold and dry locations

Ink Handling

⚠Caution:

- If ink gets into your eyes, flush it out immediately with plenty of water. If irritation continues, seek medical attention.
- If ink comes into contact with your skin, wash it off thoroughly using soap.
- If someone swallows ink by mistake, force large quantities of water (or milk) without inducing vomiting, and watch his/her condition.
- Allow plenty of ventilation during printing.
- If you feel unwell during use, seek medical advice.
- Only use the ink for printing purposes.
- Keep the ink out of the reach of children.

Location of ⚠ Caution Label

This machine has a ⚠ caution label meant to ensure safe operation.
Follow the indication of the label and use the machine safely.

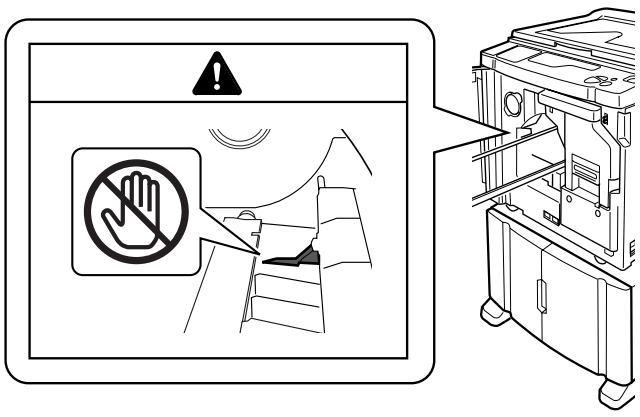

REG-LL_EN.book Page 28 Wednesday, September 14, 2011 12:03 PM

Basic Process

The machine presents two basic operational processes; master-making process and printing process.

- **Process for printing from a paper document or book**

  A placed original is scanned by the scanner, and a generated master is rolled around the Print Drum (Cylinder). After a while, proof copy is performed. After checking the print result, enter the number of copies to be printed and start printing.

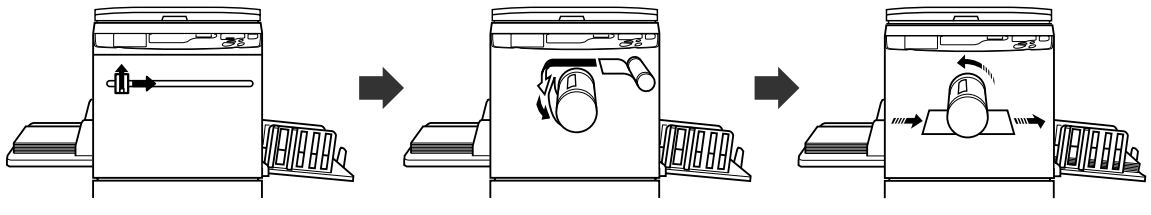

- **Process for printing with data generated using a computer**

  Data sent from a computer is transformed into images, and a generated master is rolled around the Print Drum (Cylinder).
  You can send instructions for printing from the computer (through the printer driver).

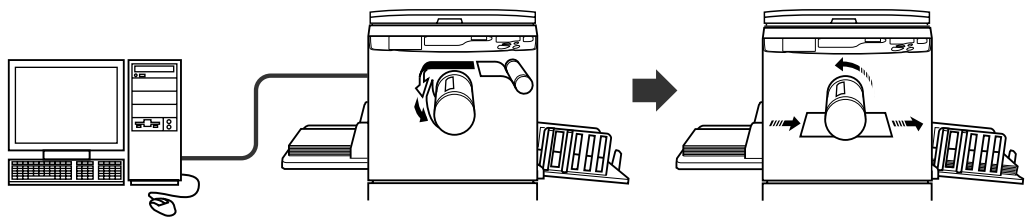

Important!:

- Some optional kits are needed for connection with a computer.
  ☞p.14

REG-LL_EN.book Page 29 Wednesday, September 14, 2011 12:03 PM

Basic Operations

Printing from a Paper Document or Book

1 Turn the power on.

The power switch is located on the lower right side of the machine.

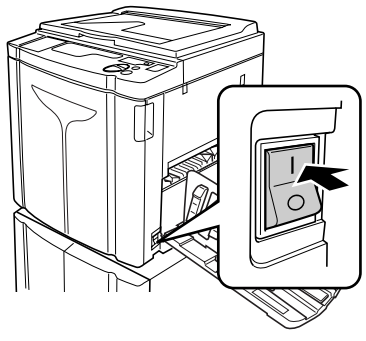

| : Power On
○: Power Off

Important!:

- When the machine is in the Energy Saving mode, the key is lighted. Press the key to wake up the machine.

Note:

- If data is received from a computer while the machine is being operated, that data may be given a higher priority for making a master. To give a higher priority to an original placed on the machine, press the key to turn off its indicator.

2 Check the display.

Check that any Check & Error Display section is not lighted or blinking.
☞p.102

Note:

- When the ○ indicator is lighted, idling action is activated just before the master-making operation. ☞p.64

- **When "ECO" is displayed:**

  When the power switch is set to ON or the machine is activated from the Sleep status, "ECO" is displayed in the Print Quantity Display.
  If the PIN code-input is needed, "PASS" is continuously displayed.

- **When "PASS" is displayed:**

  The PIN code-input is required when "PASS" is flashing on the Print Quantity Display. For the PIN code-input, see ☞p.31.

3 Place an original.

- **When placing on the Glass Platen**

  Open the Platen Cover and place the original face down. Align the center of the original with the mark on the left-hand side of the glass. After placing the original, slowly close the Platen Cover.
  Magazines, books, scrap books, etc. should be placed on the Glass Platen. ☞p.19

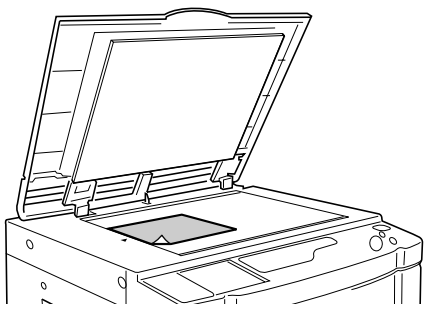

Note:

- When placing an original is completed, the process is automatically changed to the master-making mode; the Master-Making indicator on the Control Panel lights. If the indicator is not lighted, press the key.

REG-LL_EN.book Page 30 Wednesday, September 14, 2011 12:03 PM

● **When placing in the ADF unit (Option)**

Use the ADF unit if you are printing multiple originals in succession. Place originals face down and then adjust the ADF Original Guides to the width of the originals. Insert the originals as far into the ADF unit as possible.

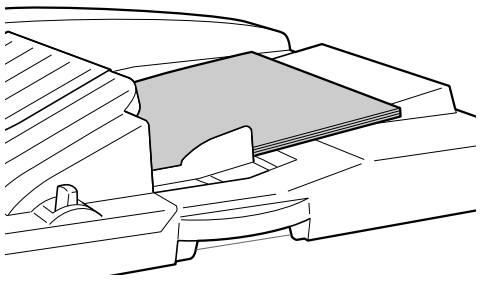

Important!:

- The sizes of originals to be placed in the ADF unit must be 100 mm × 148 mm ($3^{15}/_{16}$"×$5^{27}/_{32}$") at least. For smaller originals, use the Glass Platen.
- Do not load inappropriate originals or originals of mixed sizes into the ADF.
  This can causes paper jams or trouble.
  ☞p.18

Note:

- You can place up to about 50 sheets of originals in the ADF unit.
- The Custom Setting mode allows you to set the Auto-Process to perform automatically when an original is placed in the ADF unit.
  ☞p.66
- If using the Custom Setting mode you select ON for Semi-Auto, the next master-making is automatically started and then the machine will stop when the ADF unit contains originals.
  ☞p.66

4 Make necessary settings.

Make various settings including image processing mode selection.
☞p.34~☞p.47

5 Press the ◇ key.

The original is scanned, and a master is made. After a master has been made, a proof copy is printed.

Check the proof copy result; e.g., print position and density.

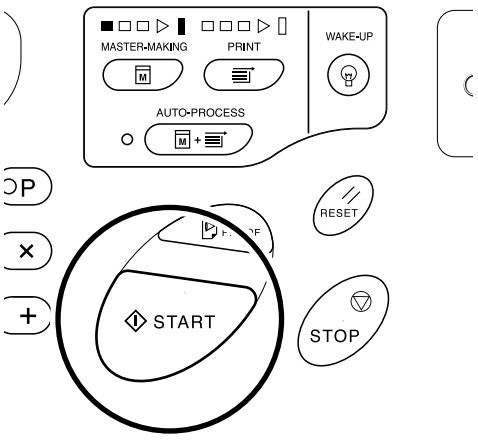

Note:

- You can change the settings for print position and density. After changing the settings, press ▷, and then check the proof copy result.
  ☞p.48~☞p.51

6 Enter the number of copies to be printed, using the Print Quantity keys.

The specified number is shown on the Print Quantity Display.

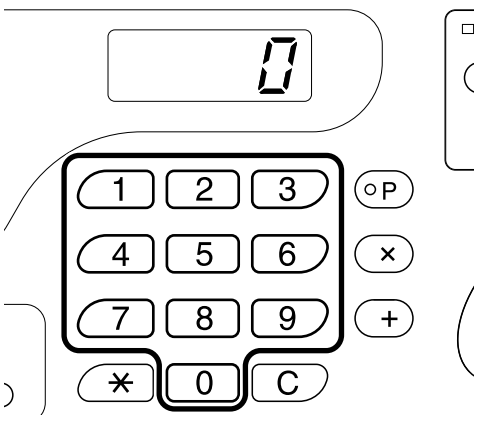

Note:

- If you enter an incorrect number, press the **[C]** key, and then enter the correct number.

7 Press the ◇ key.

The specified number of copies will be printed.

Note:

- You can change the print speed using the Print Speed Adjustment keys.
  ☞p.51
- If printing is stopped halfway, check the display.
  ☞p.102~☞p.111

REG-LL_EN.book Page 31 Wednesday, September 14, 2011 12:03 PM

8 Press the // key.

After printing has been finished, return the settings to the initial settings.

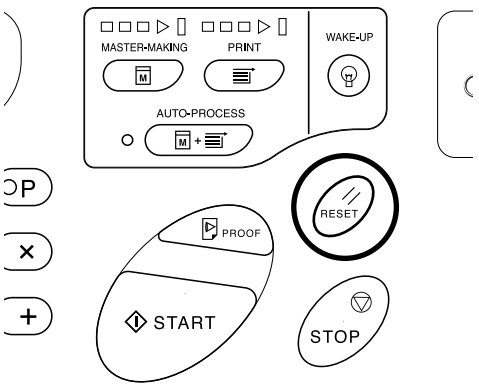

9 Remove the printed paper.

Pull and open the Receiving Tray Paper Guides, and then remove the paper.

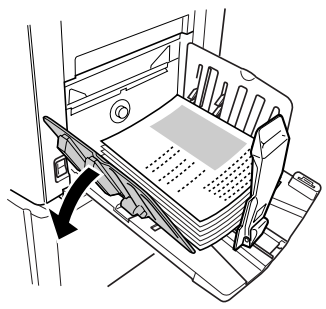

Note:

- For EZ2XX, lift the corrugators and pull the guides open.

Tip:

- Depending on the operation status of the machine, different Progressive Arrow sections light or blink.

  Progress Arrows

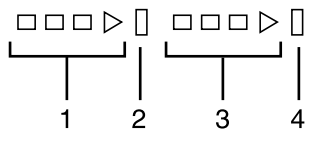

  1) Master-making progress arrow
  2) Master-making stop bar
  3) Printing progress arrow
  4) Printing stop bar

- Arrow 1 blinks and increments by one segment: Master-making process in progress
- Arrow 3 blinks and increments by one segment: Printing process in progress
- The stop bar lights: Indicating Stop timing
- Both 1 and 2 light: Master-making process can be executed.
- Both 3 and 4 light: Printing process can be executed.
- Both 1 and 4: In the Auto-Process mode
- The machine halts and halfway arrow segments blink: A restoration instruction is being waited.

Tip:
When “PASS” is displayed

If “PASS” flashes on the Print Quantity Display, the User Management function is set by the administrator. Input a PIN code.

1) Enter your PIN code using the Print Quantity keys.
The PIN code is shown as “-”.

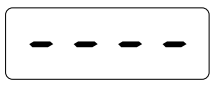

2) Press the ◇ key.

Note:

- Consult your administrator for the PIN code.
- If an incorrect PIN code is entered, the alarm sounds and the PIN code input mode is restored. Re-enter the correct PIN code.
- If a disabled user set in the Custom Setting mode performs the procedures above, the alarm sounds and an Error No. (F-39) is displayed. Press the // key to release the error. ☞p.81

After access has been verified, the Print Quantity Display displays the Normal mode, and you can start the printing operation.

Important!:

- After printing operation, press the key to log out. (If you do not log out, access privileges will be inactivated with “Auto clear time”). ☞p.67
  To prevent the use by the unauthorized third parties, we recommend you log out from the machine.

REG-LL_EN.book Page 32 Wednesday, September 14, 2011 12:03 PM

Printing with Data Generated by a Computer (Optional Kit Required)

1 Set the power switch to | (ON) to turn the power on.

The power switch is located on the lower right side of the machine.

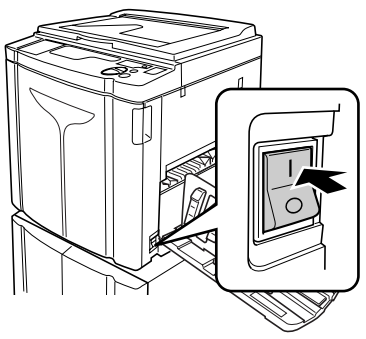

| : Power On
○ : Power Off

Important!:

- When the machine is in the Energy Saving mode, the key is lighted. Press the key to wake up the machine.

● When “ECO” is displayed:

When the power switch is set to ON or the machine is activated from the Sleep status, “ECO” is displayed in the Print Quantity Display.
If the PIN code-input is needed, “PASS” is continuously displayed.

● When “PASS” is displayed:

The PIN code-input is required when “PASS” is flashing on the Print Quantity Display. For the PIN code-input, see ☞p.31.

2 Check that the indicator is on.

If the indicator is off, press the key.

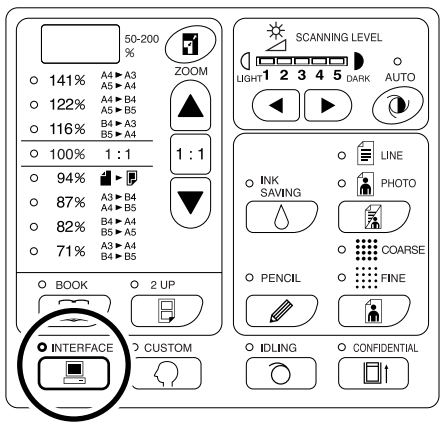

Important!:

- If the key is pressed while the indicator is flashing, the data currently being received or which is waiting for output is deleted.

3 Check the paper and Drum (Cylinder) color (colour).

To change the paper or Drum (Cylinder) color (colour), replace the paper on the Paper Feed Tray or replace the Color Drum (Cylinder) as needed.

REG-LL_EN.book Page 33 Wednesday, September 14, 2011 12:03 PM

4 Send document data from the computer.

While the machine is receiving data, the indicator blinks.
When data-reception is complete, printing starts automatically at the printer driver settings.

Important!:

- You cannot make various settings including image processing mode, by operating the machine. Only the printer driver allows such settings. For details, see the user's guide of the printer driver.

Note:

- You can also use the printer driver to stop the master-making or printing process at any point. For details, see the User's Guide of the printer driver.
- By checking which Progress Arrow segments light or blink, you can identify at which status the machine is stopped. ☞p.31
  When the machine has been halted with Progress Arrow segments blinking, it is waiting for a start instruction. Press the ◇ key to resume the process indicated by the blinking arrow segments.
- If you press the ✳ key when the machine is not in use after the master-making process or when you stop the machine during printing, the page number currently being printed will be displayed in Print Quantity Display.
- Data is printed in the order in which it was received.

Tip:
When the computer sends document data, the machine automatically receives it and starts the master-making process. It is judged whether or not the machine is in use, based on how much time elapsed after any key had been pressed last or printing had been finished.
This time period is called the "Reservation Period". You can change the initial setting for the occupied time in the Custom Setting mode. ☞p.66

Tip:

- **About the indicator**
  The status of the machine and data reception can be understood from the lighting of the indicator.

Lighting of Indicator	Description
○ Lit solidly	The machine is ready to receive data from the computer.
☼ Flashing rapidly	The machine is receiving data.
¤ Flashing slowly	The machine is waiting to output data. (The received data has been digitally processed and is waiting for the output command.) Or the machine is making a master of or printing the digitally processed data.
● Out	The machine cannot receive data.

Note:

- While the indicator is flashing, the data currently being received or which is in waiting for output can be deleted by pressing the key.

REG-LL_EN.book Page 34 Wednesday, September 14, 2011 12:03 PM

Setting up for Scanning Originals

Selecting the Image Processing Mode [Line, Photo, Duo]

In order to make a quality master, select an appropriate mode depending on whether originals contain only text, photo or both of them.

Press the key to select the Image Processing mode.

Each time you press the key, the indicators light in the order; (Line)→ (Photo)→ (Duo)

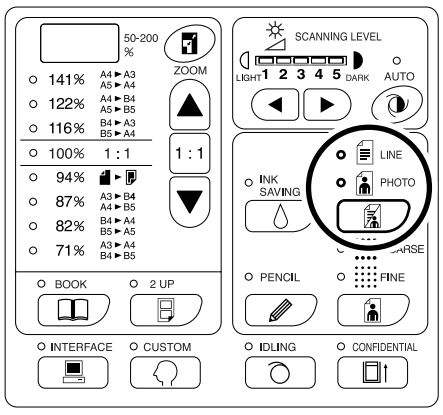

The table shows which types of originals are appropriate for each mode.

Mode	Type of Originals	Scanning Level Adjustment	
		1-5	AUTO
Line	Only text contained; e.g., text document, newspaper	Available	Available
Photo	Only photos contained	Available	Not Available
Duo	Both text and photos contained	Available	Not Available

Important!:

- With the Photo mode or Duo mode selected, you can process images with a dot screening when printing. (For EZ3XX only)
  ☞p.36
- With the Photo mode or Duo mode selected, you cannot select “Auto” for the scanning level. Perform manual adjustment.
  ☞p.39
- You cannot use the Image Processing mode and Pencil mode together.

Note:

- Select the Pencil mode when printing from an original written with a pencil.
  ☞p.35
- The Custom Setting mode allows you to change the initial setting for the Image Processing mode and Duo mode adjustment.
  ☞p.66
- The initial setting is “Line” and the Scanning Level Adjustment is “AUTO”.
  If “Line” is changed to another mode and set back to “Line” again, Scanning Level Adjustment is set to 3 (not AUTO).

REG-LL_EN.book Page 35 Wednesday, September 14, 2011 12:03 PM

Scanning Originals Written with Pencils [Pencil]

This function allows clearer printing from such originals containing faint contents as those written with pencils.

Press the ✎ key to turn on its indicator.

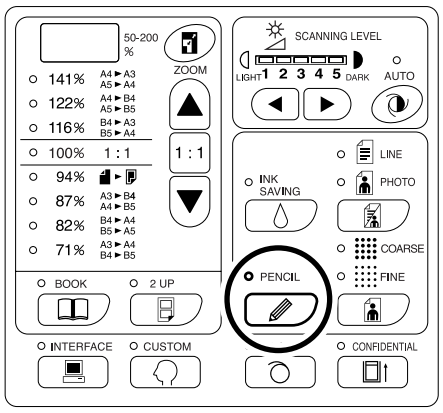

Important!:

- You cannot use the Pencil mode and Image Processing mode at the same time.
- You cannot use the Pencil mode and Dot Process mode at the same time.
- When in the Pencil mode, adjust the scanning level manually. You cannot select “Auto”.
  ☞p.39

Note:

- To clear the Pencil mode, press the ✎ key again to turn off its indicator or select another image processing mode.
- The Custom Setting mode allows you to change the initial setting for the Pencil mode adjustment.
  ☞p.69

REG-LL_EN.book Page 36 Wednesday, September 14, 2011 12:03 PM

Processing Photos with Dot Screening [Dot Process] (For EZ3XX only)

This function processes photo originals with dot screening, resulting in clearer printing. You can select the dot screening pattern from two types.

Press the key to select the type of a dot screening.

Each time you press the key, the indicators light in the order; (COARSE)→ (FINE)→ and then OFF.

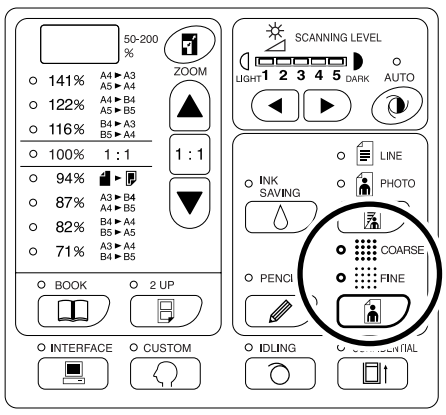

The table shows the equivalent lpi (line per inch) to each type:

Type	Equivalent Lpi
COARSE	53
FINE	106

Important!:

- You cannot use the Dot Process mode and Line mode together.
- You cannot use the Dot Process mode and Pencil mode together.

REG-LL_EN.book Page 37 Wednesday, September 14, 2011 12:03 PM

Enlarging and Reducing Originals [Enlargement/Reduction]

You can enlarge or reduce originals when printing.
Specify the enlargement/reduction ratio by selecting the standard ratios; or specify it in increments of 1%.

Enlarging and Reducing by Standard Ratios **[Standard]**

Select the standard ratios when enlarging or reducing standard-sized originals to another standard size or when increasing margins around the original.

Press the ▲/▼ keys to specify the enlargement/reduction ratio.

Each time you press the key, the indicator of the selected ratio lights.
To restore 100%, press the 1 : 1 key.

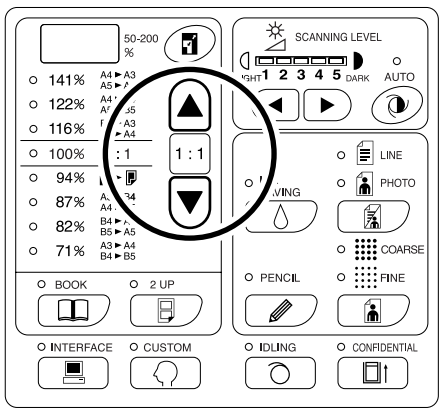

The standard enlargement/reduction ratios differ among the models.
Check the panel on your machine.

Note:

- To avoid paper jam, flipping or ink smudges on the back side by design, the machine does not print too close to the edge. The top edge in particular needs 5 mm ($^3/_{16}$") of margin space.
  ☞p.19
  5 mm ($^3/_{16}$") wide area on the top edge (marked ▲) of the Glass Platen (or the ADF unit) cannot be scanned, regardless of enlargement or reduction settings.
- Do not position the original within 5 mm ($^3/_{16}$") of the top edge, or the top edge of its printed image will be cut off.
- If the original document has no margin on its top edge, the top 5 mm ($^3/_{16}$") of its print will be cut off even when “Margin+” is selected. Move the original about 5 mm ($^3/_{16}$") inwards from the top edge of the Glass Platen and reduce the size.

REG-LL_EN.book Page 38 Wednesday, September 14, 2011 12:03 PM

Enlarging and Reducing with the Zoom Function **[Zoom]** (For EZ3XX only)

Specify the enlargement/reduction ratio between 50% and 200% in increments of 1%.

1 Press the [Zoom] key to select the Zoom mode.

The current enlargement/reduction ratio is shown on the display.

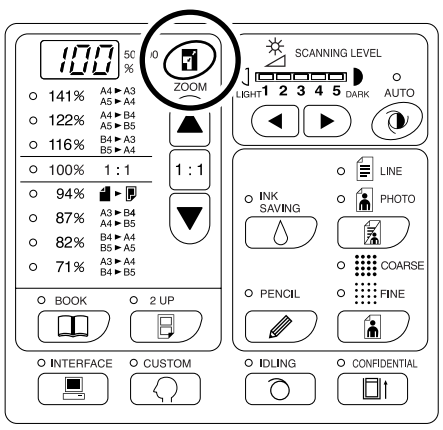

2 Press the ▲/▼ keys to select the enlargement/reduction ratio.

The selected enlargement/reduction ratio is shown on the display.

▲ key: Each press increases the ratio by 1%.

▼ key: Each press decreases the ratio by 1%.

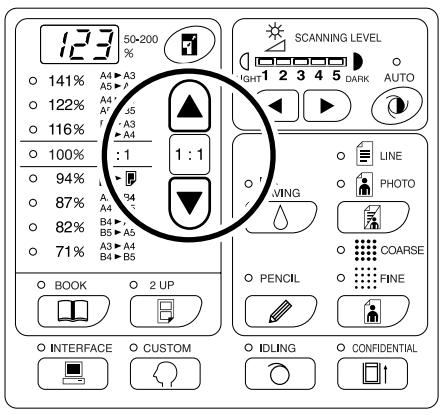

Note:

- To restore 100%, press the [Zoom] key or the 1 : 1 key.

REG-LL_EN.book Page 39 Wednesday, September 14, 2011 12:03 PM

Scanning Originals Having Faint or Dark Contents [Scanning Level Adjustment]

You can adjust the scanning level according to the density of text and images on originals.
With “Auto” selected, the density of originals is pre-scanned and the optimum scanning level is automatically set.
Manual adjustment allows you to select from five levels.
For originals containing faint text, select a high level (4 or 5). For such colored (coloured) originals as newspapers, select a low level (1 or 2).

Press the ◑ key or the ◀/▶ keys under ☼ to adjust the scanning level.

◀ key: Each press decreases the scanning level.
▶ key: Each press increases the scanning level.

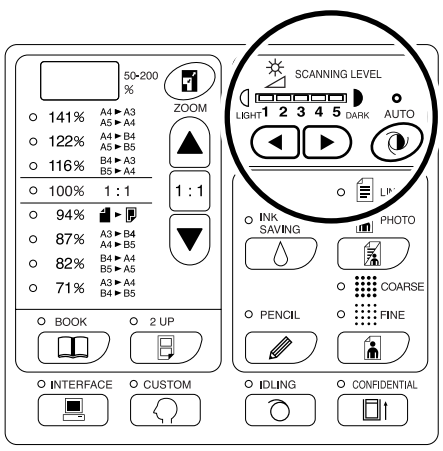

◑ :Auto
◖ :Lighter
◗ :Darker

Important!:

- With the scanning level adjusted, print several copies after remaking masters to check the print result.
- You can select “Auto” only for the Line mode. You cannot select “Auto” with the Photo, Duo or Pencil mode selected.
- With the Ink Saving mode selected, you cannot adjust the scanning level.

Note:

- The Custom Setting mode allows you to change the initial setting for the scanning level.
☞p.66

REG-LL_EN.book Page 40 Wednesday, September 14, 2011 12:03 PM

Reproducing Bound Documents [Book Shadow Edit]

This function erases the binding “spine” shadow when printing from such bound originals with facing pages as magazines and books.

Important!:

- The initial settings have been made for the size of originals whose masters can be made and the width of shadow to be erased.
  (Initial settings: for the size of original, size of paper placed on the Paper Feed Tray; for width of shadow to be erased, 20 mm($^{13}/_{16}$"))
  The Custom Setting mode allows you to change the initial settings for the size of originals and the width of shadow to be erased. ☞p.66
- If using the Custom Setting mode you have selected “Paper” as the Size of originals for Book shadow editing, use standard-sized paper. If you place custom-size paper, shadow erasure is not correctly performed.
- The outside of the set original size is not scanned and used for the master-making process.
- “Book Shadow Edit” cannot be used with **[2-Up Printing]**.
- When in the Book Shadow Edit, adjust the scanning level manually. You cannot select “Auto”.

1 Place a book (or a magazine) on the Glass Platen.

Make sure to place the original in the orientation below:
The shadow within the dotted box is erased.

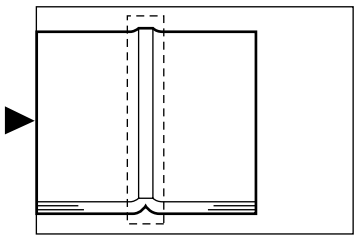

2 Press the 🕮 key to turn on its indicator.

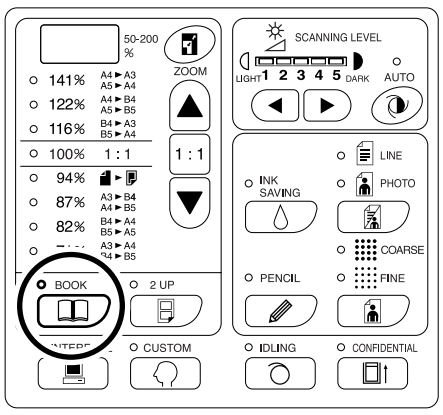

Note:

- To clear the setting, press the 🕮 key again to turn off its indicator.

REG-LL_EN.book Page 41 Wednesday, September 14, 2011 12:03 PM

Printing Originals Side-by-Side [2-Up Printing]

The same or different originals can be printed side by side.
This is called 2-Up printing.
2-Up printing allows you to place a single original or two different originals

Important!:

- With custom size paper placed, you cannot perform 2-Up printing. Quit 2-Up printing or place standard-sized paper.
- You cannot use 2-Up Printing and Book Shadow Edit together.
- “2-Up Printing” cannot be used with **[Book Shadow Edit]**.

Single-Original Printing and Two-Original Printing

Single-original printing

This prints from the same original and outputs onto a single sheet of paper side by side.

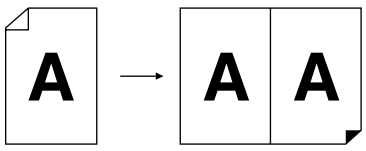

Two-original printing

This prints from two different originals and outputs onto a single sheet of paper side by side.
The center of printed copies will be free from the shade of originals.

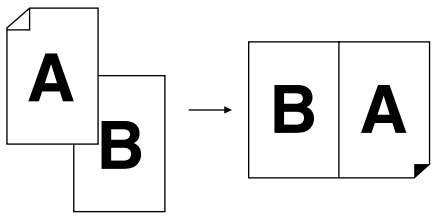

Important!:

- For two-original printing using the Glass Platen, the machine requires a certain period of time before placing the second original. Use the Custom Setting mode to select 15 seconds or 30 seconds for the interval time; the initial setting is 15 seconds.
  ☞p.66

REG-LL_EN.book Page 42 Wednesday, September 14, 2011 12:03 PM

Note:

- When using the ADF unit (option) for two-original printing, you can place two piled originals in the ADF unit. The two originals are continuously scanned for 2-Up printing.

Restrictions on 2-Up Printing

2-Up printing restricts the sizes of paper to be used, paper orientations, and the enlargement/reduction ratios.

Enlargement/reduction ratio

The table shows enlargement/reduction ratios suitable for 2-Up printing.

-EZ371/EZ331/EZ301/EZ231/EZ201-

		Original			
		A4	**B5**	**A5**	**B6**
Print Paper	A3 (For EZ371 only)	100%	116%	141%	163%
	B4	87%	100%	122%	141%
	A4	71%	82%	100%	116%
	B5	**61%**	71%	87%	100%

-EZ391/EZ221-

		Original	
		Letter	**Statement**
Print Paper	Ledger (For EZ391 only)	100%	155%
	Legal	82%	127%
	Letter	65%	100%
	Statement	**50%**	77%

═:For EZ2XX, you cannot make selections.

REG-LL_EN.book Page 43 Wednesday, September 14, 2011 12:03 PM

Paper orientation

Before printing, check the orientations of the original and print paper.

● Orientation of originals

Always place originals in the orientation below.

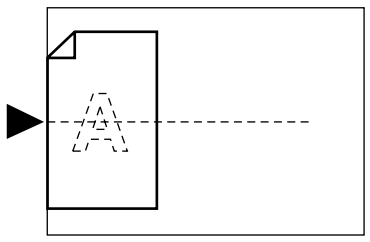

● Orientation of print paper

Always place print paper in the orientation below.

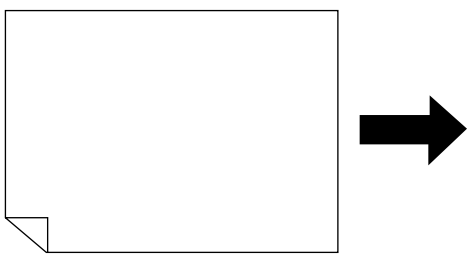

Note:

- You can specify the enlargement/reduction ratio by selecting the standard ratios or specify it in increments of 1% using the Zoom function.
  ☞p.37
- Originals must have sufficient margins. Insufficient margins result in inappropriate page layout.
  ☞p.19
- A margin of the 5 mm ($^{3}/_{16}$") on the left edge of the set original is kept regardless of the enlargement/reduction ratio.
- For two-original printing, you can separately select the following functions for each original.
  Image Processing mode, Pencil, enlargement/reduction ratio, dot process/scanning level

REG-LL_EN.book Page 44 Wednesday, September 14, 2011 12:03 PM

Operational Procedure

1 Place an original.

- **When placing on the Glass Platen**

  Place the original face down in the vertical orientation. Position it using the mark on the left-hand side of the glass.

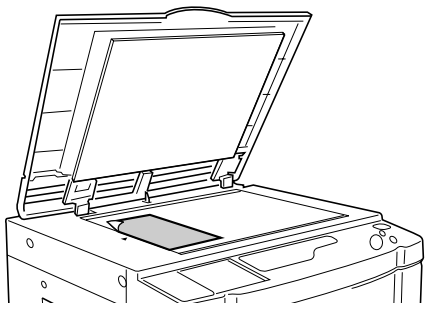

- **When placing in the ADF unit (Option)**

  Place originals face down and then adjust the ADF Original Guides to the width of the originals. Insert the originals as far into the ADF unit as possible.

  If you want to separately set the type and size of originals for each original, place one original at a time.

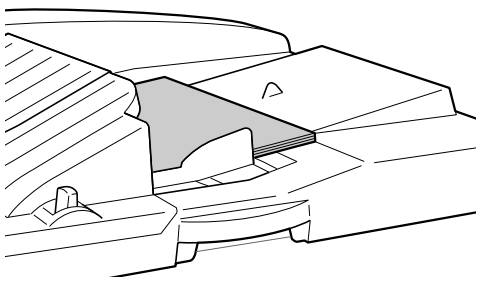

Important!:

- The sizes of originals to be placed in the ADF unit (option) must be 100 mm × 148 mm($3^{15}/_{16}$"×$5^{27}/_{32}$") at least. For smaller originals, use the Glass Platen.

2 Press the key to turn on its indicator.

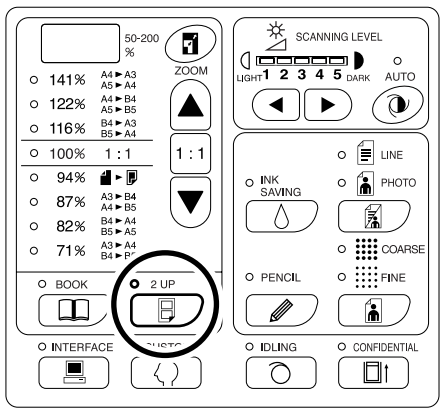

Note:

- To clear the mode, press the key again to turn off its indicator.

3 Make necessary settings.

As necessary, make various settings including Image Processing mode selection.
☞p.34~☞p.39

REG-LL_EN.book Page 45 Wednesday, September 14, 2011 12:03 PM

4 Start the master-making process.

- **When placing originals on the Glass Platen**
  - **Single-original printing**

    Press the ◇ key to start the first scan. After the scan an interval time alarm sounds. Before the alarm stops, press the ◇ key again.

    Important!:

    • If you do not press the ◇ key within the interval time, the half of the print will be blank.

    Note:

    • If you select no interval time using the Custom Setting mode, you can complete 2-Up printing by pressing the ◇ key only once.
    ☞p.66

  - **Two-original printing**

    Press the ◇ key to start the first scan. After the scan an interval time alarm sounds. Before the alarm stops, place the second original, make various settings (if necessary), and then press the ◇ key again.

    Important!:

    • If you do not press the ◇ key within the interval time, the half of the print will be blank.

- **When placing originals in the ADF unit (option)**
  - **Single-original printing**

    Press the ◇ key to start the first scan. Place the second original within the interval time. Scan of the second original is automatically started.

    Note:

    • If you don't select an interval time using the Custom Setting mode, you cannot perform single-original printing with the ADF unit.

  - **Two-original printing**

    Place two piled originals in the tray. Press the ◇ key to sequentially execute 2-Up printing using the two originals. If you want to make different settings for each original, place only the first original, and then press the ◇ key. Within the interval time, change the settings, and then place the second original. Scan of the second original is automatically started.

5 Enter the number of copies to be printed, using the Print Quantity keys.

The specified number is shown on the Print Quantity Display.

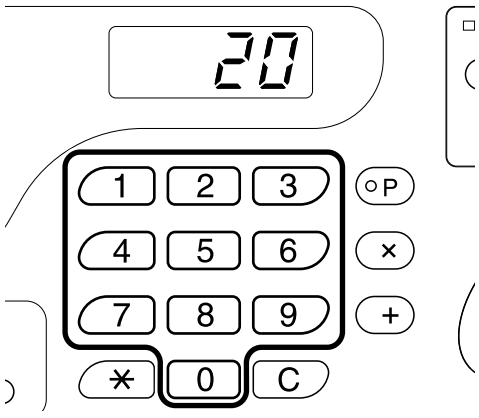

6 Press the ◇ key.

2-Up printed copies are output.

Note:

• If there exists an original in the ADF unit when "Auto-Process" is "ON" for two-original printing, 2-Up printing is sequentially executed.

REG-LL_EN.book Page 46 Wednesday, September 14, 2011 12:03 PM

Automatic Printing [Auto-Process]

With “Auto-Process” selected, enter the number of copies to be printed, and then press the ◇ key. The master-making and printing processes are automatically executed in a sequence.

Press the M + key to turn on its indicator.

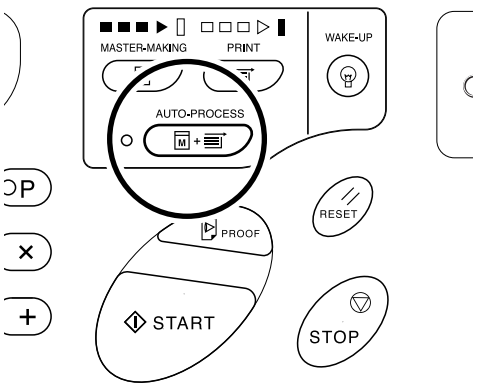

Note:

- When Auto-Process is selected and printing process is finished, Print Quantity Display returns to show the number of copies entered before printing.
- To clear the mode, press M + key again to turn off its indicator.
- The Custom Setting mode allows you to set the Auto-Process to perform automatically when an original is placed in the ADF unit (option).
☞p.66

REG-LL_EN.book Page 47 Wednesday, September 14, 2011 12:03 PM

Saving Ink [Ink Saving]

Setting the Ink Saving mode before making masters will allow the machine to save ink when printing. Because of ink consumption save processing, the print density will be lower than usual.

Press the key to turn on its indicator.

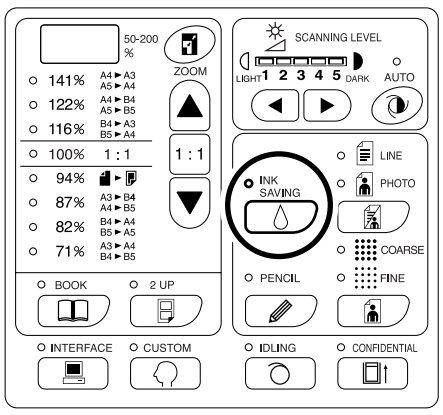

Important!:

- When using this mode, you cannot adjust the scanning level.
- You cannot adjust the print density when printing.
- You cannot set this mode to print the data created with a computer.

Note:

- To clear the mode, press the key again to turn off its indicator.
- The indicator flashes when the Ink Saving mode has been changed for the next master. It will turn ON (OFF) when operations for the next master are imparted.

REG-LL_EN.book Page 48 Wednesday, September 14, 2011 12:03 PM

Setting up for Printing

Producing Proof Copies [Proof]

After adjusting the print position and density, you can produce proof copies to check the print quality.

Press the key.

Proof copy does not affect the number shown on the Print Quantity Display.

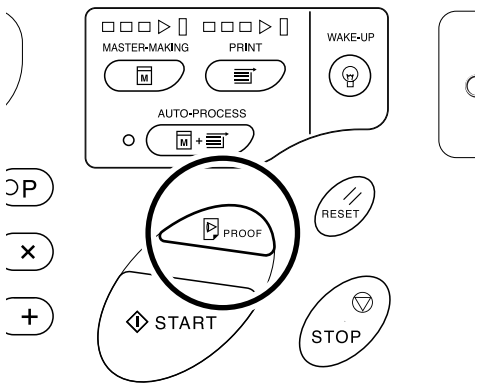

Note:

- By holding down the keys, you can continuously perform proof copy.

REG-LL_EN.book Page 49 Wednesday, September 14, 2011 12:03 PM

Adjusting the Print Density [Print Density Adjustment] (For EZ3XX only)

You can select the print density from five levels.

Press the ◀/▶ keys under ◑ to adjust the print density.

Each time you press the key, the print density is changed by one step.
◀ key: Decreases the print density.
▶ key: Increases the print density.

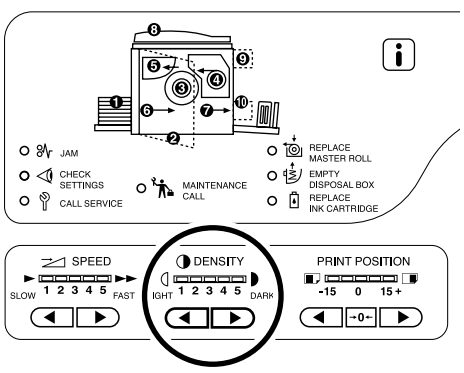

◑:Lighter
◗:Darker

Important!:

- With the Ink Saving mode selected, you cannot adjust the print density.

Note:

- The Custom Setting mode allows you to change the initial setting for the print density.
  ☞p.66
- When the “ECO mode” is selected, the initial setting for the print density is set to “1”.
  The print density can be adjusted even while the ECO mode is set to “ON”.
  ☞p.69

REG-LL_EN.book Page 50 Wednesday, September 14, 2011 12:03 PM

Adjusting the Print Position [Print Position Adjustment]

Use the Vertical Print Position Adjustment keys to adjust the print position in the vertical direction; and use the Horizontal Print Position Adjustment Dial to adjust it in the horizontal direction.
Adjustment range Vertical direction: ±15 mm(±1/2") Horizontal direction: ±10 mm(±3/8")*
*For paper of widths over 297 mm(±11 11/16"), the adjustment range in the horizontal direction becomes smaller than ±10 mm(±3/8").

Important!:

- After adjusting the print position, print a proof copy to check the result.
☞p.48

Adjusting the Vertical Position

Press the ◀/▶ keys to adjust the vertical position.

◀ key: Each press shifts the print position downward in steps of about 0.5 mm(1/64").
▶ key: Each press shifts the print position upward in steps of about 0.5 mm(1/64").
→0← key: Returns the print paper to the original position.

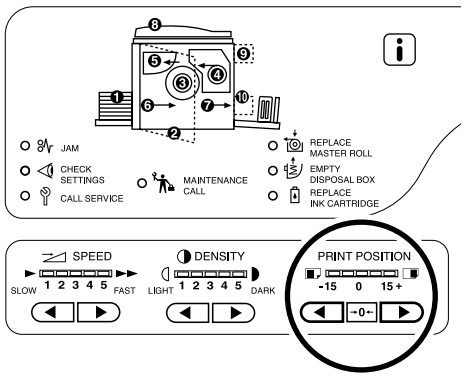

: Shifts the print position downward.
: Shifts the print position upward.

Adjusting the Horizontal Position

1 Press the Feed Tray Ascent/Descent Button to lower the Paper Feed Tray.

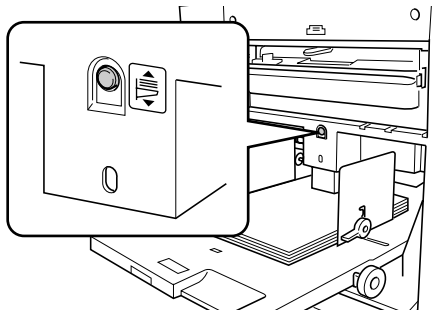

2 Turn the Horizontal Print Position Adjustment Dial beside the Paper Feed Tray.

Turn the dial upward to shift the print position to the left, and turn the dial downward to shift it to the right.
You can check the offset amount from the center, through the scale marks beside the Paper Feed Tray.
▲ on the scale indicates the center.

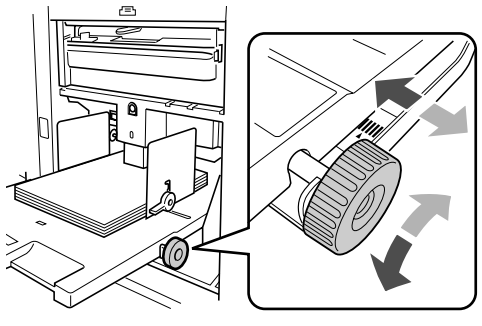

Important!:

- If you have adjusted the horizontal position, also adjust the Receiving Tray Paper Guides.
- If you have adjusted the horizontal position, make sure to reset to the center after printing is finished.

REG-LL_EN.book Page 51 Wednesday, September 14, 2011 12:03 PM

Changing the Print Speed [Print Speed Adjustment]

You can select the print speed from five levels; 60 copies per minute to 130 pages per minute.

Press the ◀/▶ keys under ⇄ to select the print speed.

Each time you press the key, the print speed is changed by one step.
◀ key: Decreases the print speed.
▶ key: Increases the print speed.

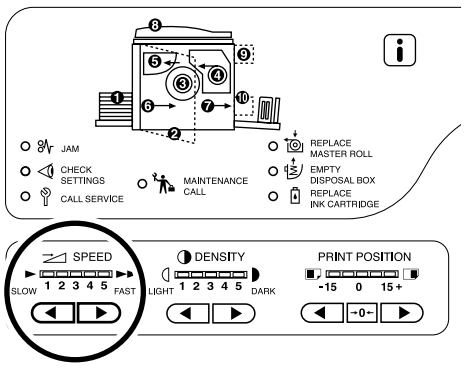

►:Slower
►►:Faster

The table shows the relationship between the indicator segment position and print speed.

Segment Position	1	2	3	4	5
Print Speed (Number of pages per minute)	Approx. 60	Approx. 80	Approx. 100	Approx. 120	Approx. 130

Note:

- The Custom Setting mode allows you to change the initial setting for the print speed.
  ☞p.66
- When the “ECO mode” is selected, the initial setting for the print speed is set to “3”.
  The print speed can be adjusted even while the ECO mode is set to “ON”.

REG-LL_EN.book Page 52 Wednesday, September 14, 2011 12:03 PM

Advanced Features

Automatic Sorting into Groups [Program]

“Program” features printing into multiple groups of sets from a single original document (Program A) and reproducing a pre-assigned number of sheets from multiple original documents (Program B).

Important!:

- “Program” is not available when “Auto Page Renewal” is selected.

● Program A (Single Page Mode)

From a single original document, print into multiple groups of sets.
A maximum of 50 groups can be created, each having up to 99 sets. Each group can be up to 9999 copies.
The machine can be configured to specify how many copies (sheets) per set, then how many sets are to be created for each group.

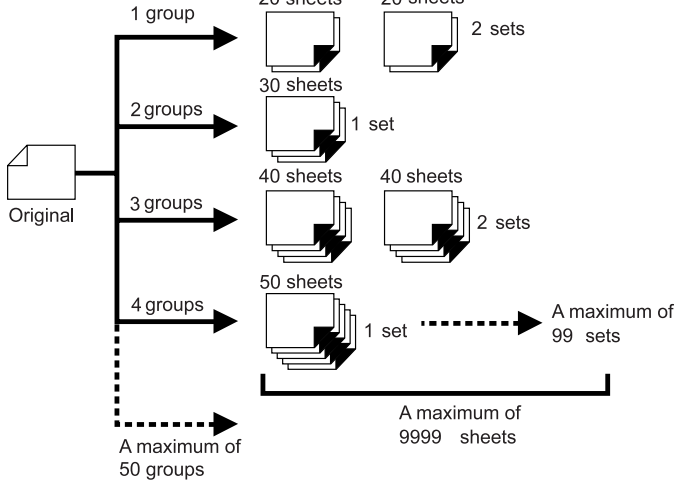

REG-LL_EN.book Page 53 Wednesday, September 14, 2011 12:03 PM

● Program B (Multi-Page Mode)

From a single original, up to 9999 copies can be made.
Each original can reproduce a pre-assigned number of sheets (up to 20 originals).

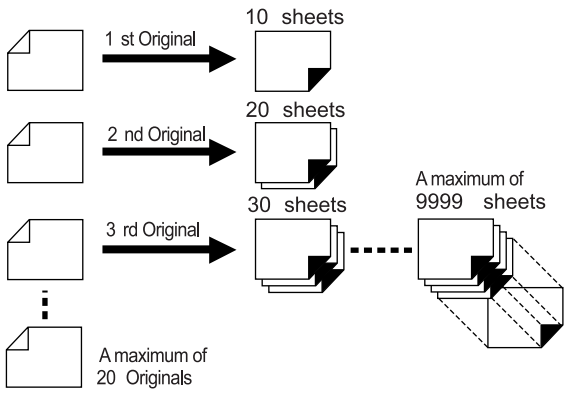

● How to Program Print

There are two ways to print in sets using “Program” printing feature.

- Program, then print (without saving the settings)
- Retrieve a saved program, then print (when program is registered)

Note:

- The Job Separator (option) is useful for Programed Printing.
  The Job Separator releases a piece of tape after each set or original document, thereby automatically separating sets or groups. It eliminates the need to manually remove a stack of sheets or insert a marker between sets. Remember to activate “Job Separation” in the “Custom Setting Mode” when printing with the Job Separator. You must remove each stack from the Paper Receiving Tray, or insert a marker during the pause if not using the Job Separator.

REG-LL_EN.book Page 54 Wednesday, September 14, 2011 12:03 PM

Setting Up for Programed Printing

- **From a single original document, print into multiple groups of sets (Program A)**

1 Press the [P] key to turn on its indicator.

[P-a] appears on the Print Quantity Display.

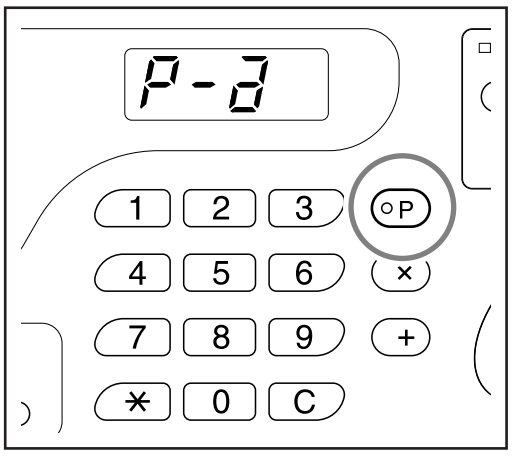

Note:

- Mode switches between **[Program A]**, **[Program B]** and **[Cancel Program]** by pressing the **[P]** key.

2 Press the [+] key.

The print quantity entry mode is started.

Note:

- Press **[×]** key to return to the previous step.

3 Enter the number of copies to be printed, using the Print Quantity keys.

Enter the number of copies for the first group.

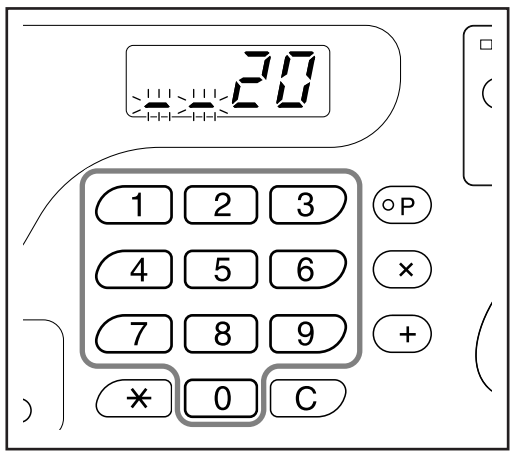

Note:

- If you enter an incorrect number, press the **[C]** key to clear the number, and then enter the correct number.

4 Press the [+] key.

The set quantity entry mode is started.

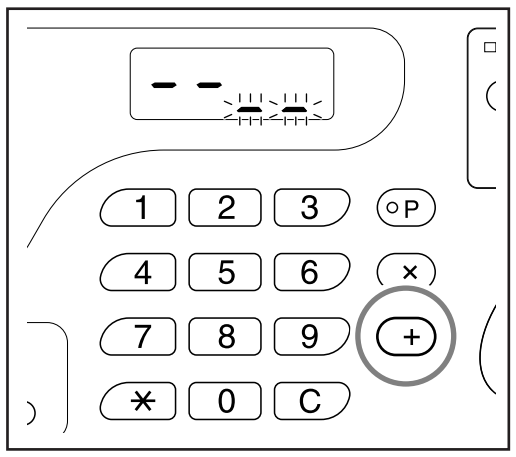

REG-LL_EN.book Page 55 Wednesday, September 14, 2011 12:03 PM

5 Enter the number of set using the Print Quantity keys.

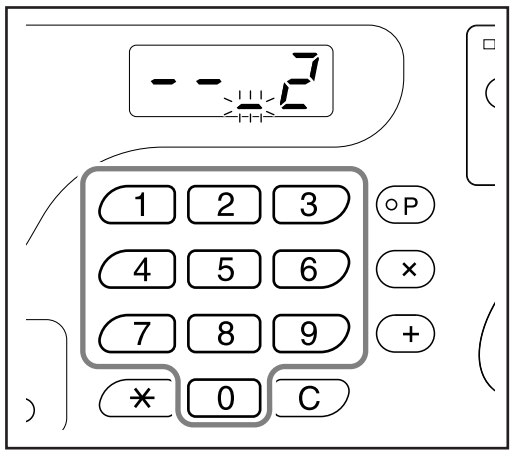

To set the next group, go to step 6.
To finish the setting and start printing, go to step 7.

Note:

- If you enter an incorrect number, press the **[C]** key to clear the number, and then enter the correct number.
- If you do not enter a number, 1 is selected.

6 Press the [+] key.

The machine then allows you to enter the number of copies for the second group.

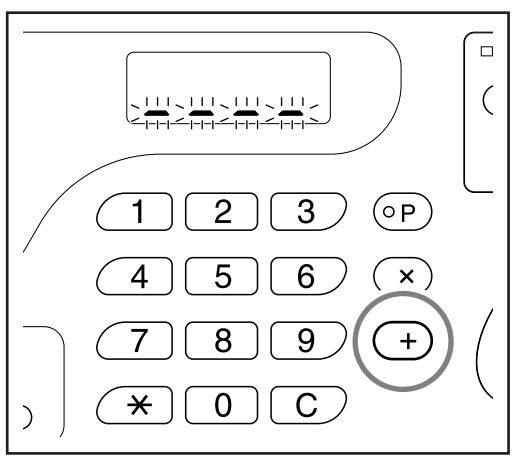

Repeat steps 3 through 6 to specify the number of copies and sets for each group.

7 Place an original.

- **When placing on the Glass Platen.**

  Place an original on the Glass Platen face down and align its center with the mark on the left-hand side of the glass.

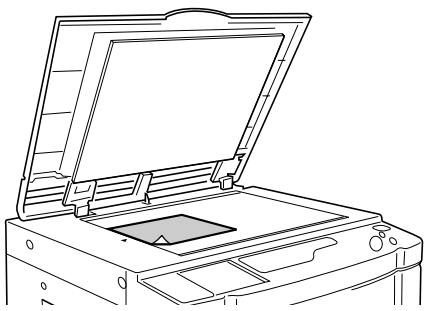

- **When placing in the ADF unit (option)**

  Place an original face down and then adjust the ADF Original Guides to the width of the original. Insert the original as far into the ADF unit as possible.

8 Make necessary settings.

Make various settings as necessary.
You can set the following functions:

- Image Processing mode
- Pencil
- Dot Process (For EZ3XX only)
- Scanning level
- Enlargement/reduction ratio
- Auto-Process

Important!:

- To save the current program settings, see “Saving Programs” (☞p.59) for further information. Once printing is finished, the settings cannot be saved.

REG-LL_EN.book Page 56 Wednesday, September 14, 2011 12:03 PM

9 Press the ◇ key.

A proof copy is printed.
Check the print result; and if necessary adjust the print position and other items.

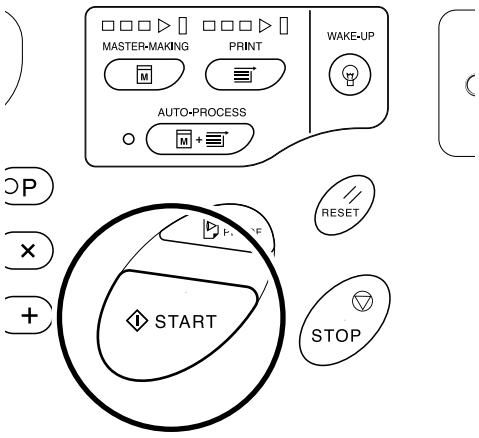

10 Press the ◇ key again.

Printing is started with the last programed group.

Important!:

- When printing is finished for all groups, the programed content is cleared. However, it is not cleared when “Auto-Process” has been set to “ON”.

Note:

- Printing is stopped each time a routine for one set is finished. If you do not use the Job Separator (option), remove printed copies from the Paper Recceiving Tray or put separation paper.
- To interrupt printing, press the ▽ key. Press the ◇ key to resume printing.

REG-LL_EN.book Page 57 Wednesday, September 14, 2011 12:03 PM

- **From multiple original documents, reproduce a pre-assigned number of sheets (Program B)**

1 Press the [P] key twice to turn on its indicator.

[P-b] is shown on the Print Quantity Display.

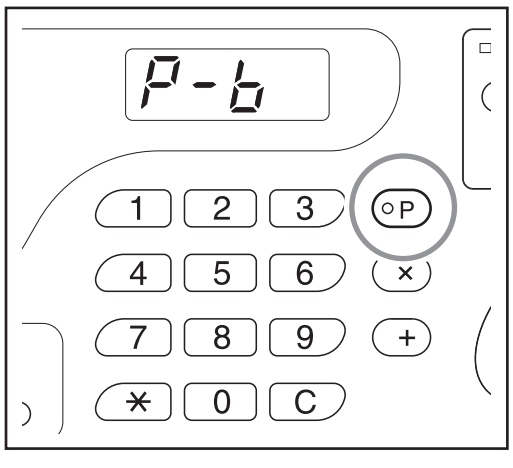

Note:

- Mode switches between **[Program A]**, **[Program B]** and **[Cancel Program]** by pressing the **[P]** key.

2 Press the [+] key.

The print quantity entry mode is started.

Note:

- Press **[×]** key to return to the previous step.

3 Enter the number of copies to be printed, using the Print Quantity keys.

Enter the number of copies for the first original.

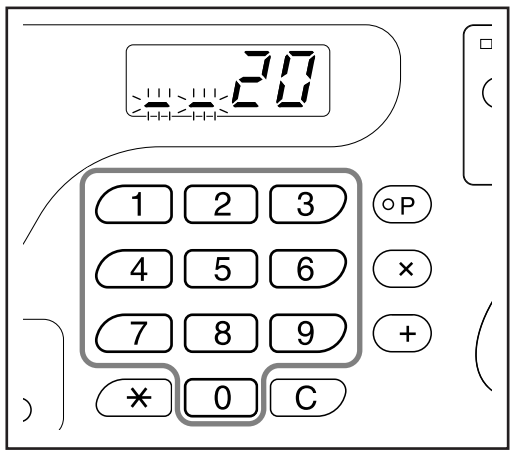

Note:

- If you enter an incorrect number, press the **[C]** key to clear the number, and then enter the correct number.

4 Press the [+] key.

The print quantity entry mode for the next original is started.

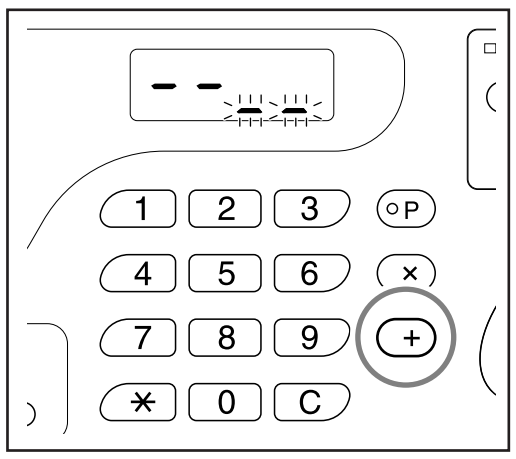

5 Enter the number of copies for the original using the Print Quantity keys.

Repeat steps 2 through 3 to specify the number of copies for each original.

REG-LL_EN.book Page 58 Wednesday, September 14, 2011 12:03 PM

6 Place an original.

- **When placing on the Glass Platen.**

  Place an original on the Glass Platen face down and align its center with the mark on the left-hand side of the glass.

  Important!:

  • Place an original from the last page. (ex. When printing 3-page originals, place them in order of 3->2->1.)

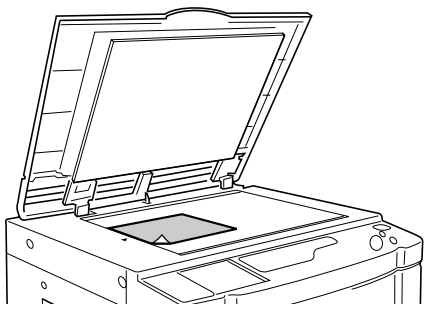

- **When placing in the ADF unit (option)**

  Use the ADF unit if you are printing multiple originals in succession. Place originals face down and then adjust the ADF Original Guides to the width of the originals. Insert the originals as far into the ADF unit as possible. (The original on the top will be scanned first.)

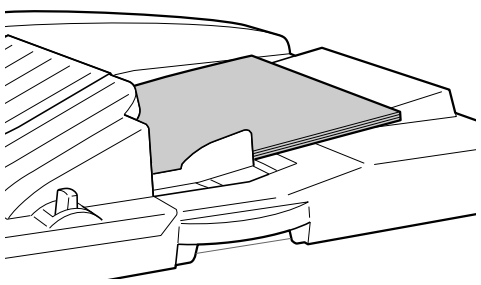

Note:

• When “Auto process” is set to ON, printing will continue automatically for all the originals.

7 Make necessary settings.

Make various settings as necessary.
You can set the following functions:

- Image Processing mode
- Pencil
- Dot Process (For EZ3XX only)
- Scanning level
- Enlargement/reduction ratio
- Auto-Process

Important!:

• To save the current program settings, see “Saving Programs” (☞p.59) for further information. Once printing is finished, the settings cannot be saved.

8 Press the ◇ key.

A proof copy is printed.
Check the print result; and if necessary adjust the print position and other items.

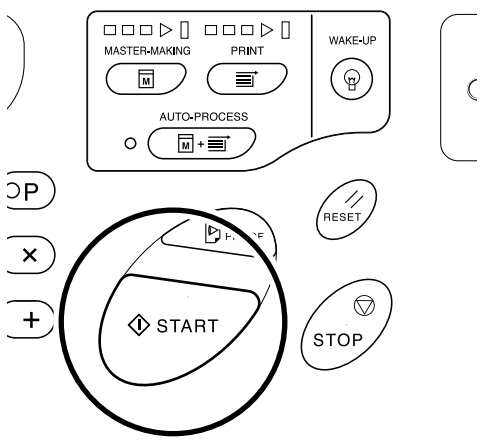

9 Press the ◇ key again.

Printing is started with the last programed group.

Important!:

• You need to press the ◇ key each time to print an original placed on the Glass Platen and replace the original once printing is finished.

Note:

• Printing is stopped each time a routine for one original is finished. If you do not use the Job Separator (option), remove printed copies from the Paper Recceiving Tray or put separation paper.

• To interrupt printing, press the ▽ key. Press the ◇ key to resume printing.

REG-LL_EN.book Page 59 Wednesday, September 14, 2011 12:03 PM

Saving Programs

Store frequently-used program settings for later retrieval and printing.
A total of 6 settings (Program A (Single Page) or Program B (Multi-Page Mode)) can be stored.

1 Set the program.

Enter the number of copies according to the steps for Program A or Program B.
For details on the setting operations, refer to the following steps.
Program A: steps 1 through 8 (☞p.54~☞p.55)
Program B: steps 1 through 7 (☞p.57~☞p.58)

2 Press the [✳] key.

Store program settings.

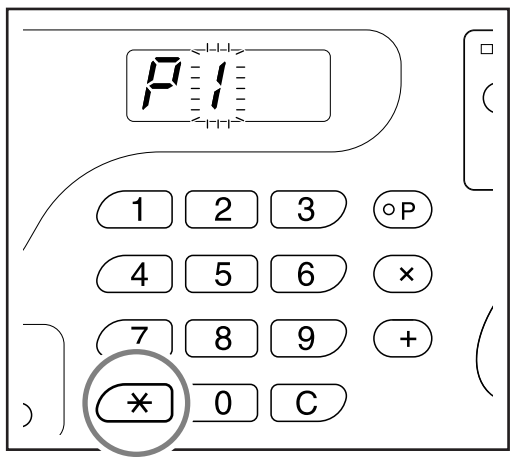

3 Enter the program number using the Print Quantity keys.

Select the number from 1 to 6.

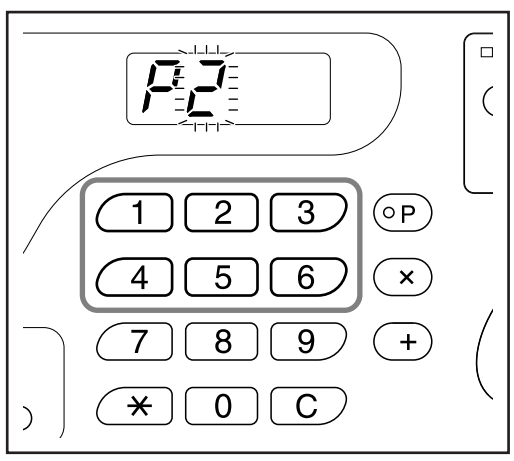

Important!:

- When a program number that has already been stored is selected, **[a]** or **[b]** is displayed on the right-most digit.
- Since selecting a number that has already been stored overwrites the previous settings, please confirm the settings on the display before saving on the same number.

4 Press the [✳] key.

Program setting is stored and **[Program A]** or **[Program B]** is displayed.

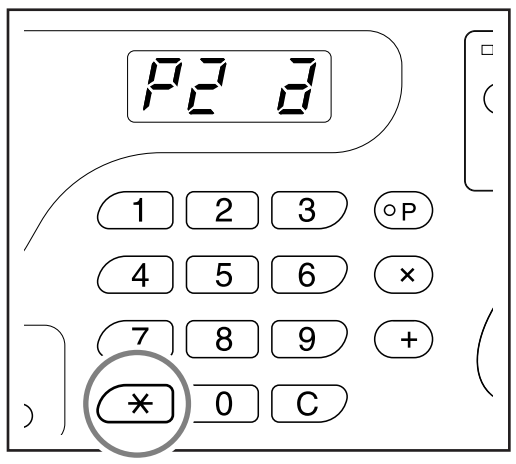

Important!:

- After storing a program, pressing the **[P]** key to finish saving the program. By pressing the ◇ key, you can start printing with a stored program.

REG-LL_EN.book Page 60 Wednesday, September 14, 2011 12:03 PM

Retrieving a Program

Stored programs can be retrieved for printing.

1 Press the [P] key to turn on its indicator.

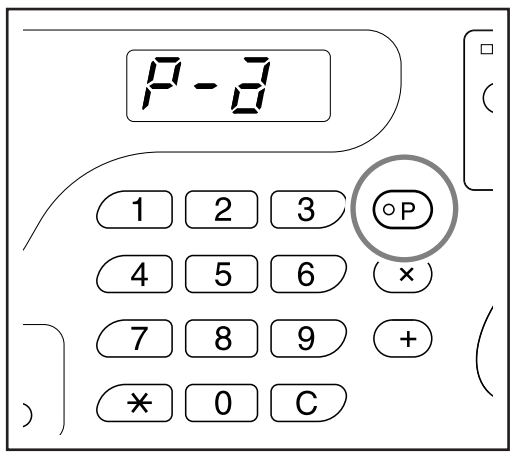

Note:

- To cancel program mode, press the **[P]** key twice.

2 Press the [✳] key.

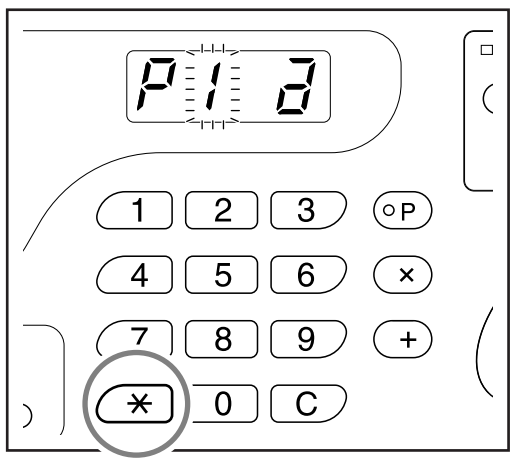

3 Enter the program number using the Print Quantity keys.

A stored program is retrieved.

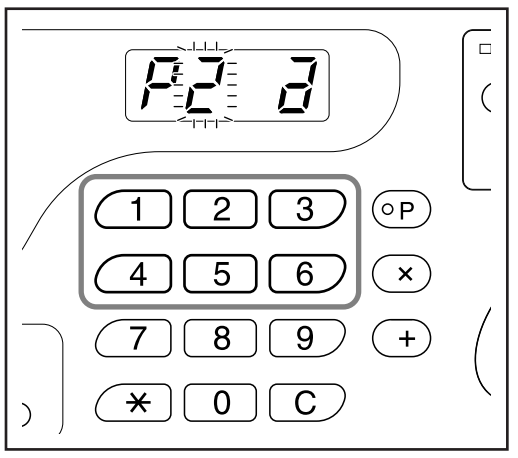

Note:

- Press the ⓘ key to start printing with retrieved program.
- You cannot enter an unstored program number.

REG-LL_EN.book Page 61 Wednesday, September 14, 2011 12:03 PM

Making changes to Stored Programs

The settings of the stored programs can be changed.

1 Retrieve a program to modify.

Follow steps 1 and 3 in “Retrieving a Program” (☞p.60)

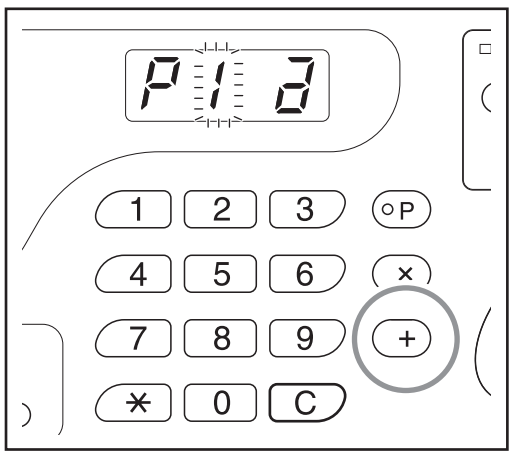

2 Press the [+] key.

Displays the stored number of copies or sets.
Press the **[+]** key continuously until the value to modify appears.

3 Press the [C] key and the Print Quantity keys to change the number of copies or sets.

4 Press the [✳] key.

Program setting is modified.

5 Store a program.

To overwrite the retrieved program, press **[✳]** again.
To store the new program number, enter the program number to store using the Print Quantity keys and press the **[✳]** key.
Changed program settings are stored.

Important!:

- Since selecting a number that has already been stored overwrites the previous settings, please confirm the settings on the display before saving on the same number.

Note:

- See “Saving Programs” (☞p.59) for details on how to store a program.

REG-LL_EN.book Page 62 Wednesday, September 14, 2011 12:03 PM

Clearing Programs

1 Press the [P] key to turn on its indicator.

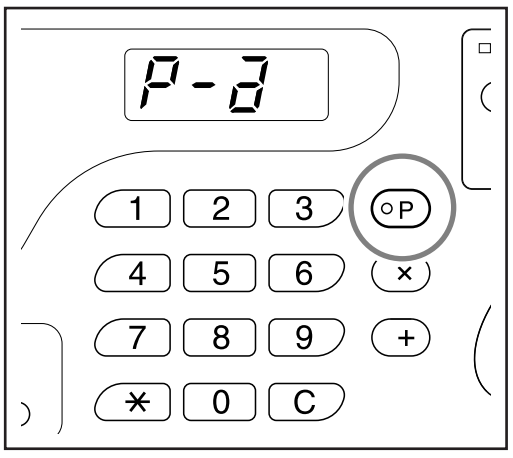

Note:

- To cancel program mode, press the **[P]** key twice.

2 Press the [✳] key.

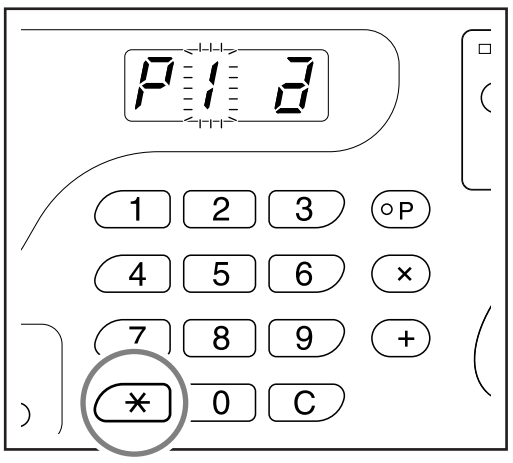

3 Enter the program number to clear using the Print Quantity keys.

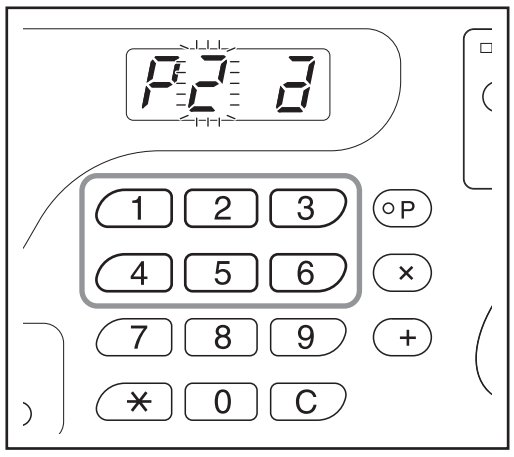

Note:

- You cannot enter an unstored program number.

4 Press the [C] key.

Program type (a/b) blinks on the display.

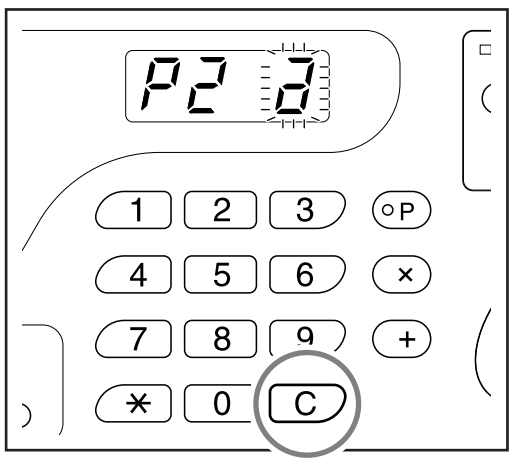

Important!:

- Press the ▽ key to cancel the clearing program.

REG-LL_EN.book Page 63 Wednesday, September 14, 2011 12:03 PM

5 Press the ◇ key.

Selected program settings are cleared.

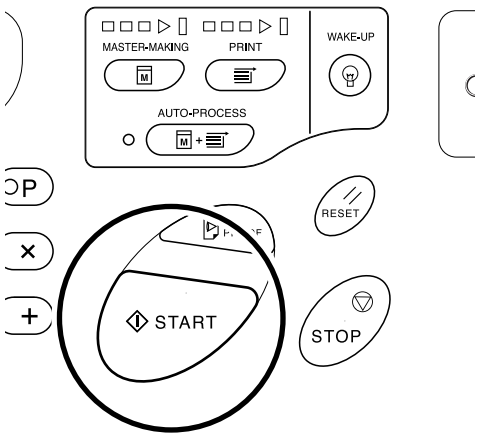

Note:

- Press the **[P]** key to cancel program mode.

REG-LL_EN.book Page 64 Wednesday, September 14, 2011 12:03 PM

Idling Action [Idling]

Idling action prevents the machine from printing the first several copies with faint ink after the Print Drum (Cylinder) has been exchanged or the machine has not been used for an extended period of time. Idling action before the master-making process assures consistent print quality from the start.

Press the ◯ key to turn on its indicator.

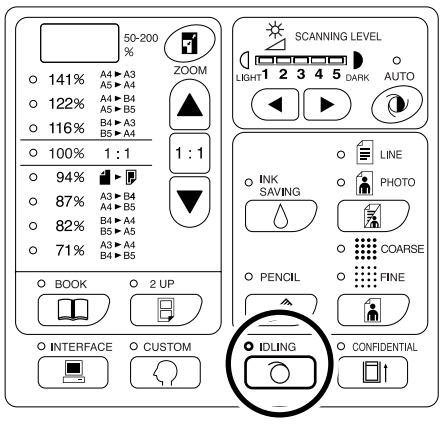

When the indicator is on, place an original, and then press the ◇ key. After idling is executed, the master-making process is started.

Note:

- To clear the mode, press the ◯ key again to turn off its indicator.
- Idling setting is not executed if the master-making operation is not performed.

Tip:

- **About Auto Idling Action**
  If the machine is not operated for a specified period of time, the indicator is automatically lighted and idling action is automatically executed when the next master-making operation is performed.
  This function is called Auto Idling Action.
  The Custom Setting mode allows you to change the initial setting for the above Auto Idling time.
  ☞p.66

REG-LL_EN.book Page 65 Wednesday, September 14, 2011 12:03 PM

Protecting Confidential Documents [Confidential Mode]

After printing is complete, the master remains on the Print Drum (Cylinder) and is ready for printing another set of copies. To protect confidential documents from unauthorized duplication, use the Confidential feature to discard the master after printing.

1 Confirm that printing has ended.

Printing should be completely finished.

2 Press the key to turn on its indicator.

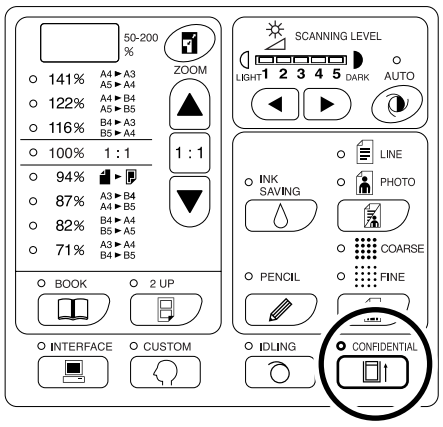

Note:

- To clear the mode, press the key again to turn off its indicator.

3 Press the key.

The current master is discarded and replaced with a blank one.

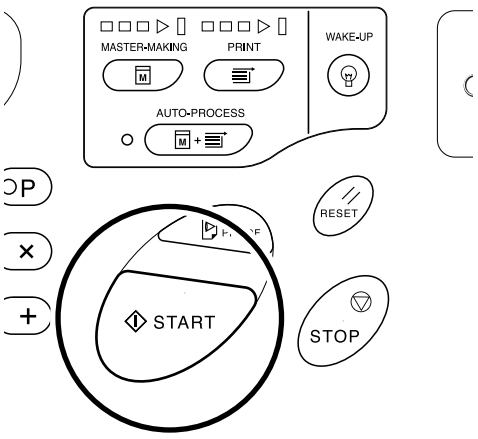

Note:

- After the discard and replacement, the Confidential mode is cleared.
- If you execute the Confidential mode processing when the indicator is on, the machine operates confidential processing and idling action at the same time. This operation is recommended before storing infrequently used drums (cylinders) such as Color Drums (Cylinders).

REG-LL_EN.book Page 66 Wednesday, September 14, 2011 12:03 PM

Customizing the Initial Settings [Custom Setting Mode]

You can change the initial settings that are restored when the power is turned on or when the // key is pressed. Changed settings are effective until they are changed again.
The changeable items and their descriptions are as follows:
= :Initial setting (factory default)

Important!:

- When “Management ON/OFF”(Item No. 81) is set to “ON”, the Custom Setting mode settings are restricted by the administrator except the items indicated *1.

  The setting of items indicated *1 can be changed by all users.
  The setting of items indicated *2 (Item No. 81-95) can be set if the administrator is registered in “Create User” (Item No. 80).

Item No.	Changeable Items		Parameter Selection					
			0	1	2	3	4	5
01	Print speed **Important!:** • When the “ECO mode” (Item No. 28) is set to “ON”, the initial setting cannot be changed.		1	2	**3**	4	5	
02	Print density (For EZ3XX only) **Important!:** • When the “ECO mode” (Item No. 28) is set to “ON”, the initial setting cannot be changed.		1	2	**3**	4	5	
03	Auto-Process Change the default setting for the “Auto-Process”.		**OFF**	ON				
04	Scanning level		1	2	3	4	5	**Auto**
05	Image Processing mode **Important!:** • With the Photo mode or Duo mode selected, you cannot select “Auto” for the scanning level.		**Line**	Photo	Duo			
06	Size of originals for Book shadow editing*1 “Paper” means the original is the same size as the paper loaded on the Paper Feed Tray.	EZ391 EZ221	**Paper**	Ledger	Legal	Letter		
		EZ371 EZ331 EZ301 EZ231 EZ201	**Paper**	A3	B4	A4	B5	
07	Width of central shadow for Book shadow editing*1		**20 mm** (**13/16"**)	30 mm ($1\frac{3}{16}$")	40 mm ($1\frac{9}{16}$")	50 mm ($1\frac{31}{32}$")	80 mm ($3\frac{1}{8}$")	

REG-LL_EN.book Page 67 Wednesday, September 14, 2011 12:03 PM

Item No.	Changeable Items	Parameter Selection					
		0	1	2	3	4	5
08	Auto idling time	None	6 hours	**12 hours**			
09	2-Up printing interval time	None	**15 seconds**	30 seconds			
10	Energy Saving mode When the machine is not used for a certain period of time, it is automatically turned off or placed into the sleep status. If you select anything except “OFF”, make sure to check the “Energy Saving mode wait time” (Item No. 11). • OFF The machine remains on until its power switch is turned off. • Auto-Sleep Lowering power consumption. When the machine goes to sleep, the ⏻ indicator lights up solidly. To wake the machine, press the ⏻ key. • Auto-Power OFF The machine is switched off. **Note:** • It is recommended to select “Auto-Sleep” with a computer connected to the machine.	OFF	**Auto-Sleep**	Auto-Power OFF			
11	Energy Saving Mode wait time Select the waiting period required to lead the machine into the Energy Saving mode.	**Approx. 5 minutes**	Approx. 15 minutes	Approx. 30 minutes	Approx. 60 minutes	Approx. 90 minutes	
12	Auto clear time Select the waiting period required to make the machine automatically reset settings.	**None**	Approx. 3 minutes	Approx. 5 minutes			
13	Paper finish*1 If paper is not supplied smoothly with “Standard” preset, you can use User 1 through 5 to program the paper supply and output adjustment parameters suitable of paper to be used. For details, contact your dealer (or authorized service representative). **Note:** • User 1 through 5 are not programed when the machine is shipped.	**Standard**	User 1	User 2	User 3	User 4	User 5

REG-LL_EN.book Page 68 Wednesday, September 14, 2011 12:03 PM

Item No.	Changeable Items	Parameter Selection					
		0	1	2	3	4	5
14	Minimum print quantity Specify the minimum number of copies to be printed from one master. If a number lower than the specified minimum number is entered, the master-making process is not executed. You can lock and prevent this setting from being changed. For more information, consult your dealer (or authorized service representative).	**0**	10 copies	20 copies	30 copies	40 copies	50 copies
15	Beep sound Specify how an alarm should sound when keys are operated or errors occur. • Level 2 A beep sounds at all preset occasions; for example at the time of key operations and event generation/end. • Level 1 A beep sounds only at the time of error occurrence, setting completion and pulling-out enabled. • Level 0 A beep does not sound at any occasions.	**Level 2**	Level 1	Level 0			
16	Reservation Period Specify the amount of time for blocking document data output from a computer when the machine is not operated.	OFF	**15 seconds**	30 seconds	60 seconds		
17	Semi-Auto(ADF unit)*1 (available only with the optional ADF unit) With “ON” selected, if an original exists in the ADF unit after printing, the next master-making process is executed followed by proof copy, and then machine operation is stopped. **Important!:** • To select “ON” for Semi-Auto, set Auto-Process to “OFF”.	**OFF**	ON				
18	Job Separation*1 Select “ON” when using an Job Separator (option).	**OFF**	ON				
20	Print Quantity restoration setting*1 Set the restoration setting for Print Quantity. Select “ON” when you want to restore the Print Quantity after printing is finished.	**OFF**	ON				

REG-LL_EN.book Page 69 Wednesday, September 14, 2011 12:03 PM

Item No.	Changeable Items	Parameter Selection					
		0	1	2	3	4	5
21	2-UP printing restoration setting*1 Set the automatic restoration setting for 2-Up printing. Select “ON” when you want to restore the 2-Up printing after 2-Up printing is finished.	**OFF**	ON				
22	Separation Fan*1 Adjust if uneven or blurred images are printed out depending on the types of the original images or printing paper. The greater the value, the stronger the fan. For adjustment methods, contact your dealer (or authorized service representative).	OFF	1	**2**	3	4	
23	Suction Fan*1 Adjust if uneven or blurred images are printed out depending on the types of the original images or printing paper. The greater the value, the stronger the fan. For adjustment methods, contact your dealer (or authorized service representative).	1	2	**3**	4		
24	Duo mode adjustment*1 Selects the image quality when “Duo” is selected in the Image Processing mode. With this setting, you can assign priority to line (letter) or photo, and set Shadow-off of the original copy. Shadow-off: Clears the background color (colour) of dark originals (such as newspapers).	**Line** **Shadow-off** **OFF**	Line Shadow-off ON	Photo Shadow-off OFF	Photo Shadow-off ON		
25	Pencil mode adjustment *1 Select “Lighter” to print cut-and-pasted pencil drawings with shadows.	**Darker**	Lighter				
28	ECO mode This mode makes the printing pressure lower than that in the normal printing mode, saving the consumption power during printing. When “ON” is selected, the initial settings for the print speed and print density cannot be changed.	**OFF**	ON				

REG-LL_EN.book Page 70 Wednesday, September 14, 2011 12:03 PM

Item No.	Changeable Items	Parameter Selection					
		0	1	2	3	4	5
50	Quantity Display The number of copies for A4-sized (Letter-sized) and smaller paper is displayed. This number is displayed by two switching screens; a 3-digit number preceded by an under bar and a 4-digit number. Example: For 1,234,567 copies, _123➔4567➔_123➔4567	Execute steps 1 through 3 in “Operation Procedure”. ☞p.73 The number of printed copies is shown on the Quantity Display.					
51	Quantity Display The number of copies for larger than A4-sized (Letter-sized) paper is displayed. This number is displayed by two switching screens; a 3-digit number preceded by an under bar and a 4-digit number. Example: For 1,234,567 copies, _123➔4567➔_123➔4567	Execute steps 1 through 3 in “Operation Procedure”. ☞p.73 The number of printed copies is shown on the Quantity Display.					
52	Total Quantity Display The total number of copies printed with the machine is displayed. This number is displayed by two switching screens; a 3-digit number preceded by an under bar and a 4-digit number. Example: For 1,234,567 copies, _123➔4567➔_123➔4567	Execute steps 1 through 3 in “Operation Procedure”.☞p.73 The total number of printed copies is shown on the Total Quantity Display.					
53	Master Quantity Display The total number of masters generated with the machine is displayed. This number is displayed by two switching screens; a 3-digit number preceded by an under bar and a 4-digit number. Example: For 1,234,567 masters, _123➔4567➔_123➔4567	Execute steps 1 through 3 in “Operation Procedure”.☞p.73 The total number of generated masters is shown on the Total Quantity Display.					
54	Print Drum (Cylinder) Print Quantity Display The number of copies printed with the current print drum (cylinder) on the machine is displayed. This number is displayed by two switching screens; a 3-digit number preceded by an under bar and a 4-digit number. Example: For 1,234,567 copies, _123➔4567➔_123➔4567	Execute steps 1 through 3 in “Operation Procedure”.☞p.73 The number of copies printed with the print drum (cylinder) is shown on the Print Drum (Cylinder) Print Quantity Display.					

REG-LL_EN.book Page 71 Wednesday, September 14, 2011 12:03 PM

Item No.	Changeable Items	Parameter Selection					
		0	1	2	3	4	5
70	Base IP address setting (For EZ3XX only) Set an IP address for the machine.	☞p.75					
80	Create User Up to 100 users (administrator included) can be registered to use the machine by performing the PIN code-input. ☞p.78	Administrator	U-1 to U-99 (for user)				
81	Management ON/OFF*2 Enables or disables the User Management function. ☞p.80	OFF	**ON**				
82	Disable*2 Turns machine access permission ON/OFF. ☞p.81	**usable**	unusable				
83	Total Count Limit (per user)*2 Sets the upper limit of TC for each user. ☞p.82	**OFF**	1 to 9999				
84	Master Count Limit (per user)*2 Sets the upper limit of MC for each user. ☞p.82	**OFF**	1 to 9999				
85	Reset Total Counter (per user)*2 Clears the TC for a specified user.	☞p.83					
86	Reset Master Counter (per user)*2 Clears the MC for a specified user.	☞p.83					
87	Reset all User Counters*2 Resets the TC and MC for all users in a single procedure.	☞p.84					
88	ID Counter Report Monthly Reminder setting*2 When counting regularly, the reminder date can be set for the counted date. ☞p.85	**OFF**	1 to 31 **Note:** • To use the feature of ID Counter Report, the optional RISO PC Interface Card USB2.0 is required.				
89	ID Counter Report Monthly Reminder (stop)*2 Press the **[+]** key to disable the output of counting results for the current month, and “idcc” is not displayed until the next month of the reminder date.	☞p.85					

REG-LL_EN.book Page 72 Wednesday, September 14, 2011 12:03 PM

Item No.	Changeable Items	Parameter Selection					
		0	1	2	3	4	5
90	ID Counter Report Output*2 Prints out a listing of machine usage details for every user.	☞p.86					
91	ID Counter Report Output setting*2 Specifies the method of outputting the count process. **Note:** • To output from E-mail, the RISO Network Card (option) is required.	**Print**	Mail				
95	Delete all User Management settings*2 Clears settings for all users including those of the administrator.	☞p.87					
99	Initial Setting Restoration Resets all Custom Setting mode settings to the initial settings (factory default).	Execute steps 1 and 2 in “Operation Procedure”. ☞p.73					

REG-LL_EN.book Page 73 Wednesday, September 14, 2011 12:03 PM

Operation Procedure

This section explains how to set items in the Custom Setting mode.

1 Press the key to turn on its indicator.

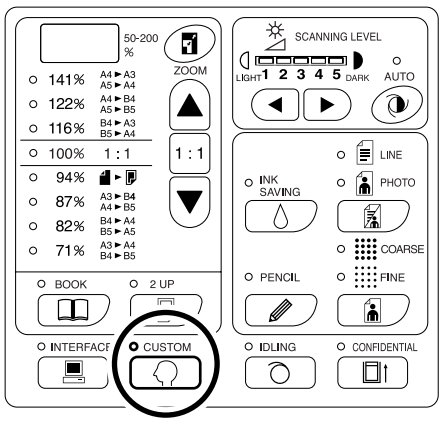

Important!:

- If the RISO Network Card (option) is installed, you will not be able to enter the Custom Setting mode for up to one minute after turning the power on.

Note:

- To clear the mode, press the key again to turn off its indicator.

2 Enter an item number to be changed, using the Print Quantity keys.

The Print Quantity Display shows the current parameter setting for the selected item number.

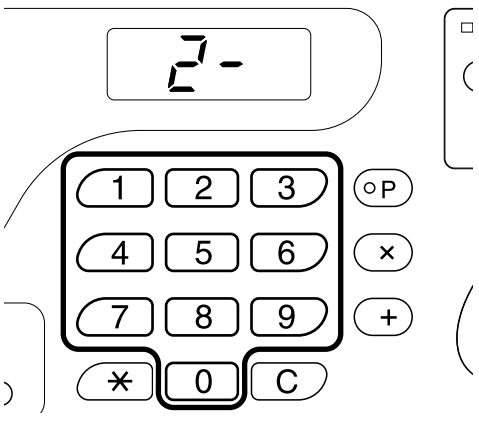

Note:

- For items No. 70 through 95 (except 91), the operation procedures differ.
  - Item No. 70: ☞p.75
  - Item No. 80 through 95 (except 91): ☞p.78~☞p.87
- To restore the initial settings for the Custom Setting mode, enter “99” and press the **[+]** key, and then press the key.

3 Press the [+] key.

Pressing this key allows you to select a parameter number.
The currently set parameter number blinks.

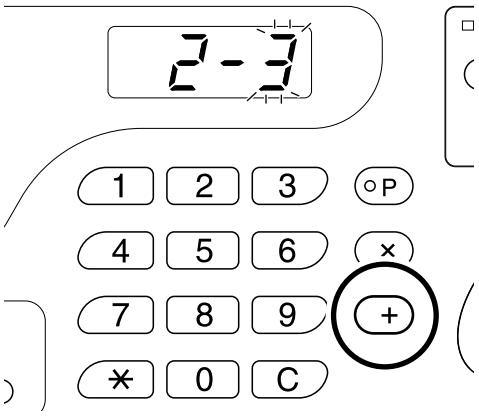

4 Enter a parameter number using the Print Quantity keys.

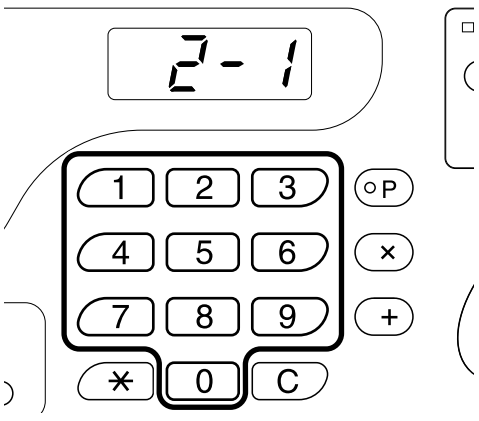

If there are more than one item to be changed, press the **[+]** key, and then repeat steps 2 through 4.

REG-LL_EN.book Page 74 Wednesday, September 14, 2011 12:03 PM

5 Press the ◇ key to complete the settings.

The changed contents are programed and the normal mode is restored.

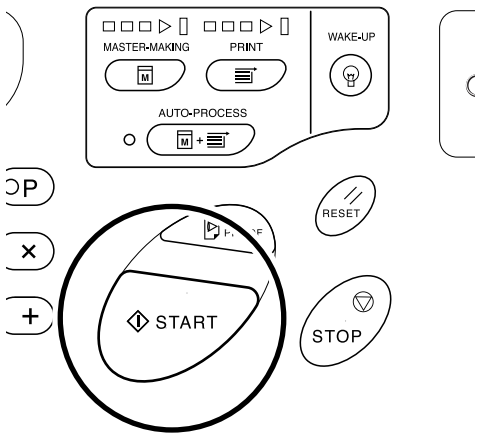

REG-LL_EN.book Page 75 Wednesday, September 14, 2011 12:03 PM

IP Address Setting

When connecting a computer, you need to set IP addresses on the machine. Make sure they are connected to the network before attempting to set an IP address. If they have not been connected to a network with an Ethernet cable, the IP address you enter will be cleared when you turn the power off.

Important!:

- For EZ2XX, set IP addresses on a connected computer.

1 Press the key to turn on its indicator.

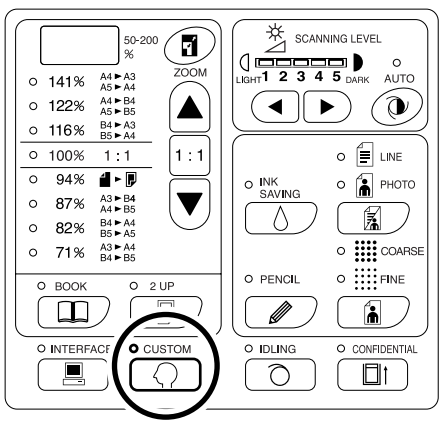

Important!:

- If the RISO Network Card (option) is installed, you will not be able to enter the Custom Setting mode for up to one minute after turning the power on.

Note:

- To clear the operation, press the key again to turn off its indicator.

2 Enter an item number using the Print Quantity keys.

The item number is 70.

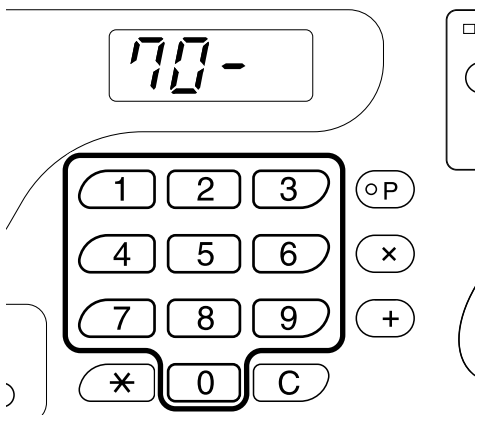

3 Press the [+] key.

4 Enter the first field using the Print Quantity keys.

The entered number is shown on the Free Reproduction Size Display.

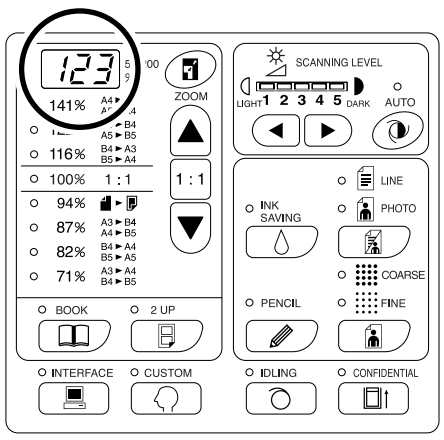

Note:

- The IP address numbers separated by dots are called the first field, second field, and so on in the order.
- The initial IP address settings for the machine is “0.0.0.0”. Setting the IP address of the machine to "0.0.0.0" will turn on DHCP by default.

5 Press the [+] key.

Continue to the next field. The Print Quantity Display changes.

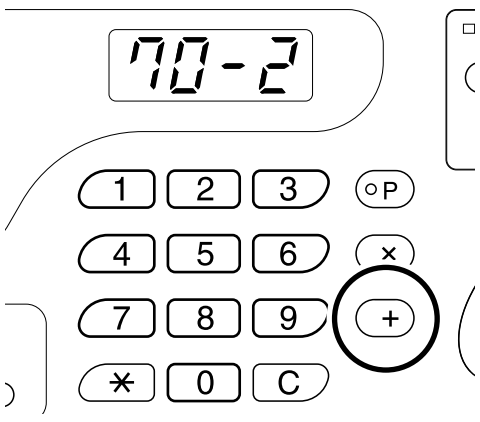

REG-LL_EN.book Page 76 Wednesday, September 14, 2011 12:03 PM

6 Repeat steps 3 and 4 to enter an IP address up to the fourth field.

7 Press the ◇ key.

The IP address setting is completed.

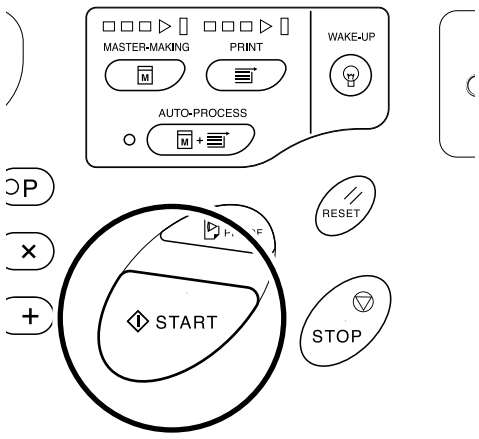

REG-LL_EN.book Page 77 Wednesday, September 14, 2011 12:03 PM

Setting Up User Management

This machine is equipped with a User Management function to ensure security and enhance user management. The User Management functions allows you to set machine access for users individually (Create User) and print a report on user access (ID Counter Report).

Setting	Description	Items
Management ON/OFF	Activates the settings below.	ON/OFF
Create User	Registers administrator and users, and sets access restrictions individually.	Administrator and user registration (PIN code/ Group assignment), Disable, Total Count Limit, Master Count Limit
ID Counter Report (Access Management)	Prints a report of access restrictions and count by user.	ID counter report output, output date reminder, count clearing (each user/all users)

To manage users, all users must be registered.
Also, users must input a PIN code to use the machine.

This section explains settings for using the User Management function and how to make those settings set by the Administrator.

Note:

- The User Management function cannot be turned ON unless an administrator is created. It is recommended to set items in the Custom Setting mode in order from Item No. 80 (80→ 81→ 82…).

REG-LL_EN.book Page 78 Wednesday, September 14, 2011 12:03 PM

Registering Administrator/Users [Create User]

In order to set the User Management function, the administrator must be registered in advance.
Up to 100 users can be registered (administrator included).
A PIN code and group number are set for each user number.

Note:

- Press the **[C]** key to cancel the entered value.
- Press **[✕]** key to return to the previous step.

1 Press the ⌂ key.

Its indicator turns on.

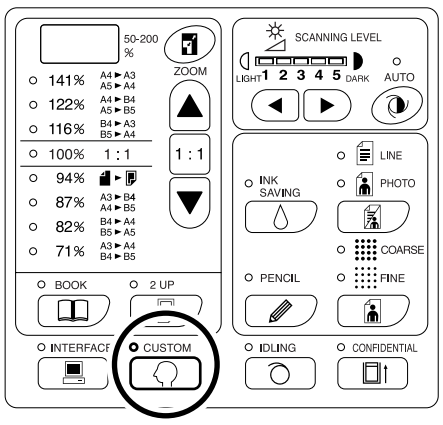

Important!:

- If the RISO Network Card (option) is installed, you will not be able to enter the Custom Setting mode for up to one minute after turning the power on.

Note:

- To clear the setting, press the ⌂ key again to turn off its indicator.

2 Enter an item number.

The item number is 80.

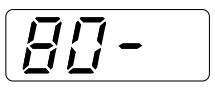

3 Press the [+] key.

"U- 0" is displayed with "0" flashing. Go to step 4 to register a user.
If "0" does not flash, register the administrator. Go to step 5.

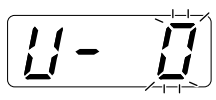

4 Enter the user number (1 to 99) to register (or change) using the Print Quantity keys.

To change the registration of the administrator, enter "0".

5 Press the [+] key.

After "PASS" is displayed, the machine enters the PIN code entry mode automatically.
The PIN code that is currently registered flashes.
"0" flashes if the PIN code is not registered.

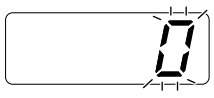

Note:

- If the entered user number is already registered, the registered PIN code is displayed.
- To clear this registration, enter "0" and press the **[+]** key. (The clearance of the registration is applied and operation returns to step 4.)
- To clear the administrator's registration, see "Clearing all User Management Function Settings". ☞p.78
  However, this will clear all User Management settings such as the user registration.

REG-LL_EN.book Page 79 Wednesday, September 14, 2011 12:03 PM

6 Enter the PIN code.

Enter the PIN code (up to four numeric digits except 0) using the Print Quantity keys.

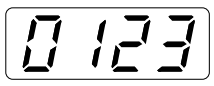

7 Press the [+] key.

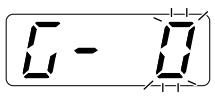

Note:

- If the PIN code is already registered, the alarm sounds and an error No. (F-38) is displayed. Press the ⁄⁄ key to release the error. (Step 6 is restored.)

8 Enter the group number (1 to 32) using the Print Quantity keys.

Note:

- If you do not set a group, enter “0”.
- The RISO NETWORK Card (option) is required to count use by group.

9 Press the [+] key.

The registration is applied, and the next user number is displayed.
Repeat steps 4 through 9 to continue the registration of other users.
To restore the normal mode, press the ⌂ key or ◇ key.

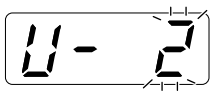

Important!:

- If you press the ⌂ key before pressing the **[+]** key, any registration is canceled and the normal mode is restored.
- If you press the ◇ key before pressing the **[+]** key, the setting is applied and the normal mode is restored.

Note:

- After registering the user number 99, the item number entry mode is restored.

REG-LL_EN.book Page 80 Wednesday, September 14, 2011 12:03 PM

Setting Up the Management ON/OFF

The administrator must be registered in advance from “Create User”. (☞p.78)

1 Press the 🎧 key and enter the item number “81”.

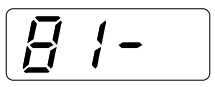

2 Press the [+] key.

The “Management ON/OFF” mode is activated.

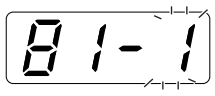

3 Enter a parameter number using the Print Quantity keys.

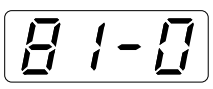

0 : OFF

1 : ON

4 Press the [+] key.

“Management ON/OFF” setting is updated, and the item number entry mode is restored.
The next item number to be set can be entered.
To return to the normal mode, press the 🎧 key or the ◇ key.

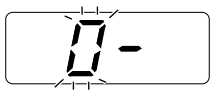

Important!:

- If you press the 🎧 key before pressing the **[+]** key, the setting is canceled and the normal mode is restored.
- If you press the ◇ key before pressing the **[+]** key, the setting is applied and the normal mode is restored.
- The user will be asked to verify access during operations if “Management ON/OFF” is set to “ON”. Entering the PIN code set in Create User restores the normal mode. ☞p.31

REG-LL_EN.book Page 81 Wednesday, September 14, 2011 12:03 PM

Suspend a user

You can enable or disable any user from using the machine.
A disabled user is not allowed to use the machine.

Important!:

- The administrator must be registered in advance from “Create User”. (☞p.78)

1 Press the key and enter the item number “82”.

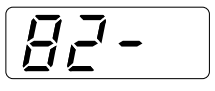

2 Press the [+] key.

The user number entry mode is activated.

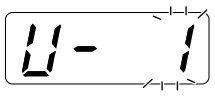

3 Enter a user number using the Print Quantity keys.

4 Press the [+] key.

The “Disable” mode is activated.

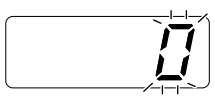

Note:

- If you enter an unregistered user number or administrator No. “0”, the alarm sounds and the user number entry mode is restored. Enter a correct user number.

5 Enter a parameter number using the Print Quantity keys.

0 : ON
1 : OFF

6 Press the [+] key.

The selected user is suspended, and the next registered user number is displayed.
Repeat steps 3 through 6 to continue to disable other users.

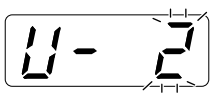

Important!:

- If you press the key before pressing the **[+]** key, the setting is canceled and the normal mode is restored.
- If you press the key before pressing the **[+]** key, the setting is applied and the normal mode is restored.
- An Error No.(F-39) is displayed when a disabled user inputs the PIN code. Press the key to release the error.

Note:

- When the last registered user has been suspended, the item number entry mode is restored.

REG-LL_EN.book Page 82 Wednesday, September 14, 2011 12:03 PM

Setting the Upper Limit of the User's Usage

Set the Total Count Limit or Master Count Limit. Limits up to 9,999 can be set.

Important!:

- The administrator must be registered in advance from "Create User". (☞p.78)

1 Press the ∩ key and enter the item number.

The item numbers are as follows:

- Total Count Limit: 83
- Master Count Limit: 84

2 Press the [+] key.

The user number entry mode is activated.

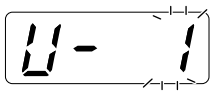

3 Enter a user number using the Print Quantity keys.

4 Press the [+] key.

The "Total Count Limit" mode or "Master Count Limit" mode is displayed.

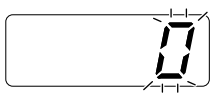

Note:

- If you enter an unregistered user number, the alarm sounds and the user number entry mode is restored. Enter a correct user number.

5 Enter the limit number using the Print Quantity keys.

Note:

- Setting "0" for the upper-limit count enables limitless printing.

6 Press the [+] key.

The setting of the upper-limit count is applied, and the next registered user number is displayed. Repeat steps 3 through 6 to continue to set the upper-limit count for other users.

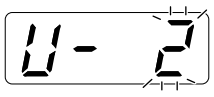

Important!:

- If you press the ∩ key before pressing the **[+]** key, the setting is canceled and the normal mode is restored.
- If you press the ◇ key before pressing the **[+]** key, the setting is applied and the normal mode is restored.
- An alarm sounds and an Error No. (F-04) is displayed if the Total Count (Master Count) reaches the upper limit during printing. TPress the // key to release the error. To restart printing, contact the administrator and clear the TC or MC. ☞p.83

Note:

- When the count has been set for the last registered user, the item number entry mode is restored.

REG-LL_EN.book Page 83 Wednesday, September 14, 2011 12:03 PM

Clearing the TC or MC for each user

You can clear the current TC or MC for each user. You can also clear the counts of either TC or MC for all users in a single procedure.

Important!:

- After the counter is cleared, it cannot be recovered.
- The administrator must be registered in advance in the “Create User”. (☞p.78)

1 Press the key and Enter the item number.

The item numbers are as follows:

- Reset Total Counter: 85
- Reset Master Counter: 86

2 Press the [+] key.

The user number entry mode is activated.

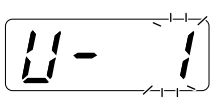

3 Enter a user number using the Print Quantity keys.

- **To clear the total count (master count) for all users at a time, follow the steps below:**
  - **1)** Input “00” in the user number mode.
  - **2)** Press the **[+]** key.
    The total count (master count) for all users is cleared and the item number entry mode is restored.

4 Press the [+] key.

“LC--” is displayed, and then the upper-limit count set is displayed.

5 Press the [+] key.

“PC--” is displayed and then the total count is displayed.

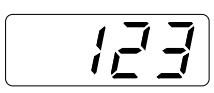

Note:

- After pressing the **[+]** key again, the next registered user number is displayed without clearing the counts. (Start from step 3.)

6 Press the [C] key.

The TC or MC displayed on the Print Quantity Display is cleared.

7 Press the [+] key.

The count is cleared, and the next registered user number is displayed.
Repeat steps 3 through 9 to continue to clear the copy/master count for other users.

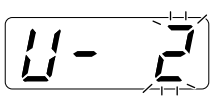

Important!:

- If you press the key before pressing the **[+]** key, clearance is canceled and the normal mode is restored.
- If you press the key before pressing the **[+]** key, the clearance is applied and the normal mode is restored.

Note:

- When the count has been cleared for the last registered user, the item number entry mode is restored.

REG-LL_EN.book Page 84 Wednesday, September 14, 2011 12:03 PM

Reset all User Counters

You can clear the count of both copy and master for all users in a single procedure.

Important!:

- After the counter is cleared, it cannot be recovered.
- The administrator must be registered in advance in the “Create User”. (☞p.78)

1 Press the ⌂ key and enter the item number “87”.

2 Press the [+] key.

The “Reset all User Counters” mode is activated.

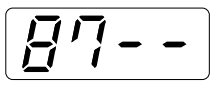

3 Press the ◇ key.

The clearance of the all users’ counts is applied, and the normal mode is restored.

REG-LL_EN.book Page 85 Wednesday, September 14, 2011 12:03 PM

Setting the ID Counter Report Reminder

If the counting result is output regularly on a specific day of the month, set that day as the reminder date. The “idcc” is displayed and the alarm sounds on the set date each month.

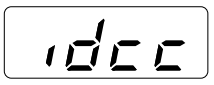

Important!:

- The administrator must be registered in advance in the “Create User”. (☞p.78)

Note:

- To use the feature of ID Counter Report, the optional RISO PC Interface Card USB2.0 is required. In addition, the optional RISO Network Card is also required to output the report from E-mail.
- You can select for the counting date from a range 1 to 31. Select “0” to set no counting date.
- When setting the reminder date between the 29th - 31st, and if the number of days in the month is less than this range such as in February, the “idcc” is displayed on the last day of the month.

1 Press the ♡ key and enter the item number “88”.

2 Press the [+] key.

The current setting flashes. “0” displayed if nothing has been set.

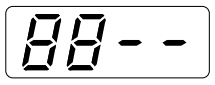

3 Enter the counting date using the Print Quantity keys.

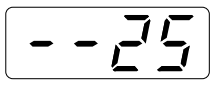

4 Press the [+] key.

The counting date is applied, and the item number entry mode is restored.

Important!:

- If you press the ♡ key before pressing the **[+]** key, the setting is canceled and the normal mode is restored.
- If you press the ◇ key before pressing the **[+]** key, the setting is applied and the normal mode is restored.

Note:

- On the counting date, turning on the power sounds the alarm and displays “idcc.” Output the counting result. ☞p.86
- Alternatively, perform “ID Counter Report Monthly Reminder (stop)” (item number:89) if you do not output for the current month; “idcc” does not appear until the counting date of the following month. ☞p.71

REG-LL_EN.book Page 86 Wednesday, September 14, 2011 12:03 PM

Output the ID Counter Report

The listing of the use of the machine by all users is printed.

Important!:

- The administrator must be registered in advance in the “Create User”. (☞p.78)
- Make sure that A4(Letter) paper has been placed in the Paper Feed Tray.
- If executing output when “Management ON/OFF” is “OFF”, the machine status during the period “Management ON/OFF” was “ON” is output.

Note:

- To use the feature of ID Counter Report, the optional RISO PC Interface Card USB2.0 is required. In addition, the optional RISO Network Card is also required to output the report from E-mail.
- You can set the reminder date. ☞p.85
- You can select outputting method from Printing or E-mail attached. ☞p.72

1 Press the key.

Its indicator turns on.

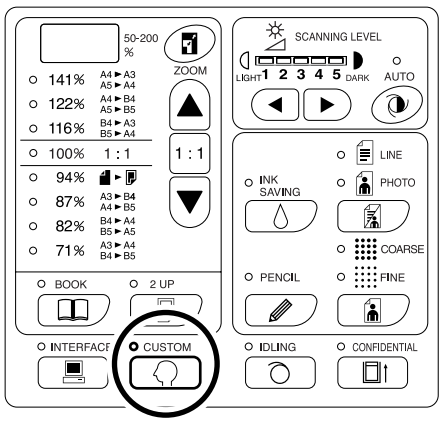

Important!:

- If the RISO Network Card (option) is installed, you will not be able to enter the Custom Setting mode for up to one minute after turning the power on.

Note:

- To clear the setting, press the key again to turn off its indicator.

2 Enter the item number “90” and press the [+] key.

The “ID Counter Report Output” mode is activated.

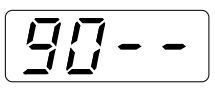

3 Press the [+] key.

The output is executed, and the item number entry mode is restored.

Important!:

- If you press the key before pressing the [+] key, the counting result is not outputted, and the normal mode is restored.
- If you press the key before pressing the [+] key, the counting result is outputted, and the normal mode is restored.

REG-LL_EN.book Page 87 Wednesday, September 14, 2011 12:03 PM

Clearing all User Management Function Settings

The settings for all users including administrator is cleared.
The cleared items are as follows:

- Create User
- Management ON/OFF
- Suspend a User
- Total Count Limit (per user)
- Master Count Limit (per user)

Important!:

- Once the User Management function is cleared, it cannot be retrieved.
- The administrator must be registered in advance in the “Create User”. (☞p.78)

1 Press the ⌂ key.

Its indicator turns on.

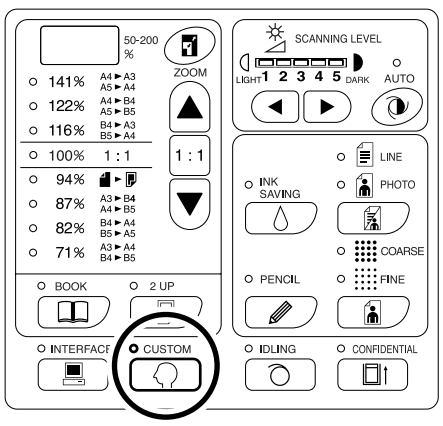

Important!:

- If the RISO Network Card (option) is installed, you will not be able to enter the Custom Setting mode for up to one minute after turning the power on.

Note:

- To clear the setting, press the ⌂ key again to turn off its indicator.

2 Enter the item number “95” and press the [+] key.

The “Delete all User Management settings” mode is activated.

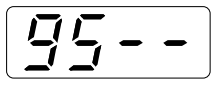

3 Press the ◇ key.

The clearance of the User Management function settings is applied, and the normal mode is restored.

REG-LL_EN.book Page 88 Wednesday, September 14, 2011 12:03 PM

Replacing and Disposing Consumables

Replacing the Ink Cartridge

When the Ink Cartridge becomes empty, the Ink Replacement indicator lights. Replace with a new Ink Cartridge.

Important!:

- For the Ink Cartridge, it is recommended to use the products specified by Riso.
- Keep the power ON while replacing the Ink Cartridge.
- Make sure to use the Ink Cartridge of the same color (colour) ink. If you want to change the ink color (colour), replace the Print Drum (Cylinder) itself.

1 Open the Front Cover.

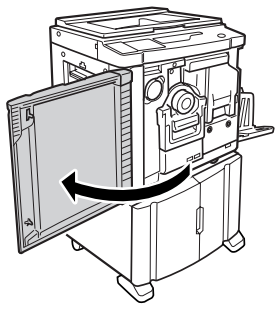

2 Pull the empty Ink Cartridge out of the holder.

Turn the Ink Cartridge counterclockwise ( ), and then pull it out.

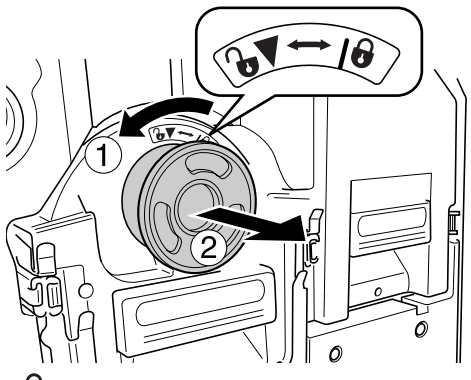

:Unlock

3 Remove the cap from a new Ink Cartridge.

Turn the cap of the Ink Cartridge to remove the cap.

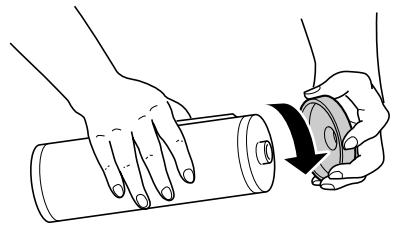

Important!:

- Do not touch or give impact to the outlet surface of the new Ink Cartridge.
  Do not peel off the label beside the Ink Cartridge opening.

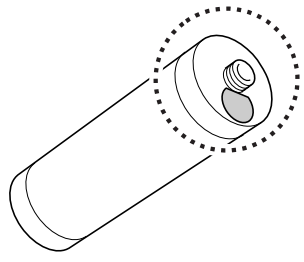

REG-LL_EN.book Page 89 Wednesday, September 14, 2011 12:03 PM

4 Insert the new Ink Cartridge.

Align the arrow on the Ink Cartridge with the ▼ mark on the holder, and push the Ink Cartridge until it stops.

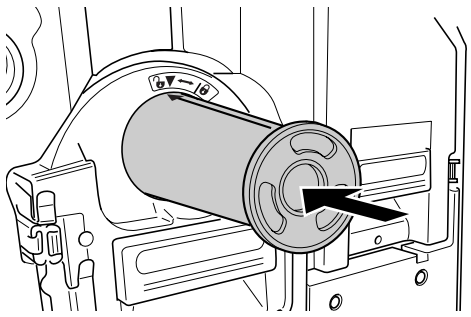

5 Lock the Ink Cartridge.

Turn the Ink Cartridge clockwise ( ) to lock it.

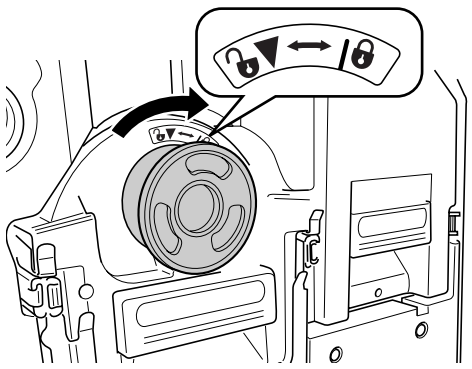

:Lock

6 Close the Front Cover.

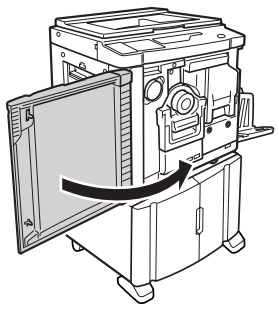

Note:

- You can use the Ink Cartridge Cap Holder to keep the cap.

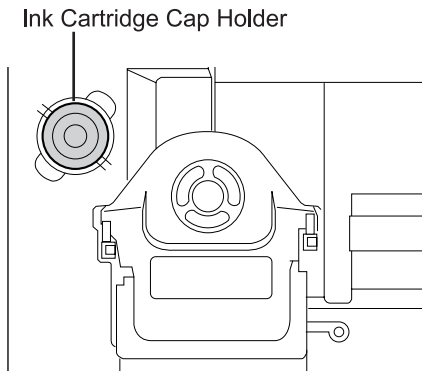

- Dispose the empty Ink Cartridge according to the disposal rule of your local community. ☞p.95

REG-LL_EN.book Page 90 Wednesday, September 14, 2011 12:03 PM

Replacing the Master Roll

When the entire Master Roll is consumed, the Master Replacement indicator lights. Replace with a new Master Roll.

Important!:

- For the Master Roll, it is recommended to use the products specified by RISO.
- Keep the power ON while replacing the master.

1 Open the Front Cover.

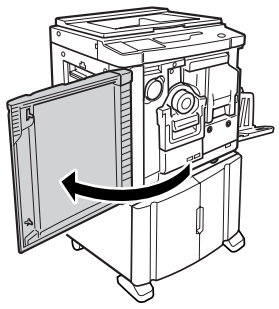

2 Check the indicator of the Master Making Unit Release button is on.

If the indicator is off, press the Master Making Unit Release button to turn on its indicator.

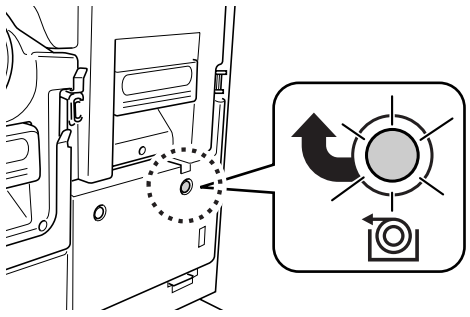

:Master Making Unit Release button

Note:

- With the Print Drum (Cylinder) pulled out, you cannot pull out the Master Making Unit. Place the Print Drum (Cylinder) into position, and then press the Master Making Unit Release button. ☞p.96

3 Pull out the Master Making Unit.

Grasp the Master Making Unit Handle and pull out the Master Making Unit until it stops.

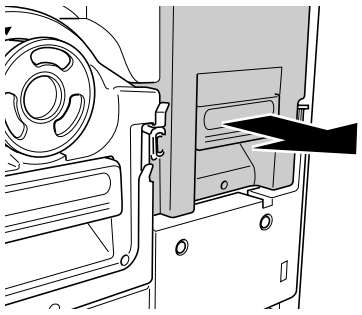

4 Open the Master Making Unit Cover.

Grasp the Master Making Unit Cover Lever and open the Master Making Unit Cover.

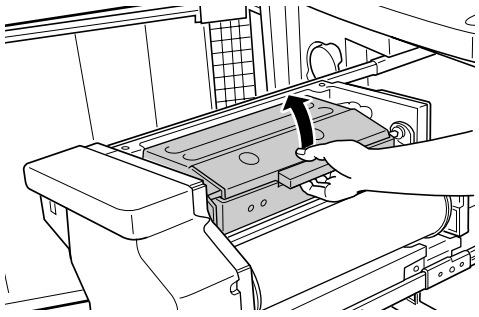

5 Open the Master Roll Holder.

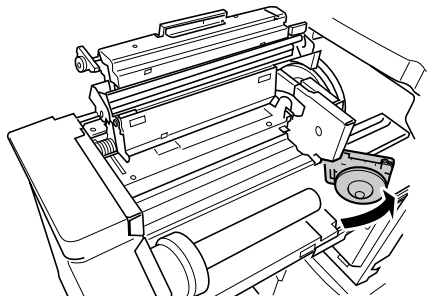

REG-LL_EN.book Page 91 Wednesday, September 14, 2011 12:03 PM

6 Remove the depleted Master Roll.

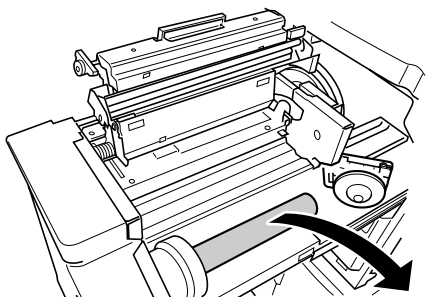

Note:

- Dispose the depleted Master Roll according to the disposal rule of your local community. ☞p.95

7 Install a new Master Roll.

Remove the shrink package (transparent film) from the new Master Roll, and place the roll so that the [i] mark on the master core comes to the left.

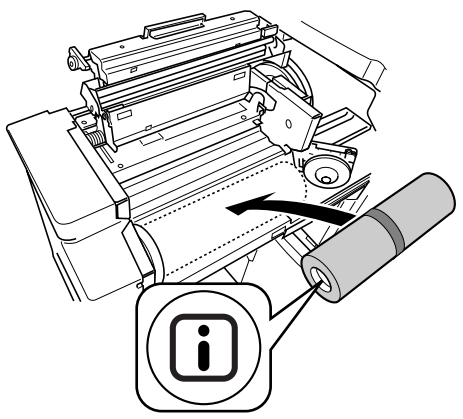

Important!:

- When removing the shrink package, be careful not to damage the section having the [i] mark. If that section is bent or the perforated line is cut, the master roll becomes unavailable.

8 Close the Master Roll Holder.

After closing the Master Roll Holder, remove the wrapper.

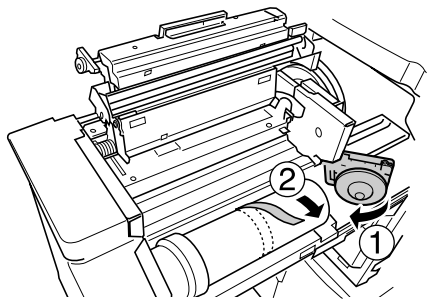

9 Insert the leading edge of the Master Roll into its entrance under the Master Guide Flap.

Insert the leading edge until it stops (①).
If the master is loose, turn the flange at the right inward to rewind (②).

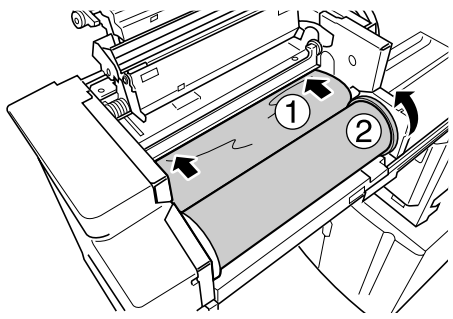

REG-LL_EN.book Page 92 Wednesday, September 14, 2011 12:03 PM

Tip:

- If you cannot insert the leading edge of the master well, use the following procedure:

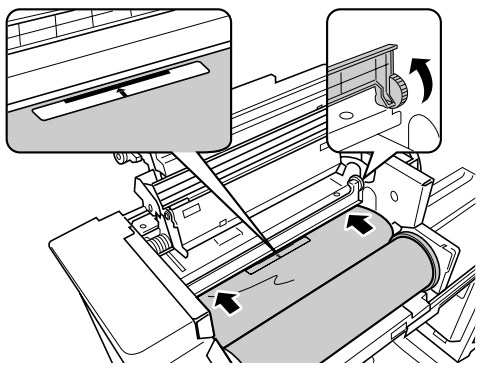

1) **Raise the Master Guide Flap.**
   Turn the wheel beside the Master Guide Flap inward to raise the Master Guide Flap.
2) **Pull out the Master Roll up to the line indicated by the arrows.**
3) **Lower the Master Guide Flap to the original position.**

10 Return the units to the original positions.

Close the Master Making Unit Cover, return the Master Making Unit to the original position, and then close the Front Cover.

REG-LL_EN.book Page 93 Wednesday, September 14, 2011 12:03 PM

Emptying the Master Disposal Box

1 Pull out the Master Disposal Box.

If the Master Disposal Box lever is locked, slide the lever to the front to unlock.

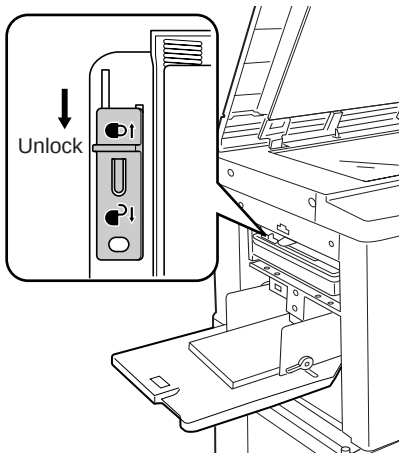

Grasp the Master Disposal Box Handle and pull out the box to the left.

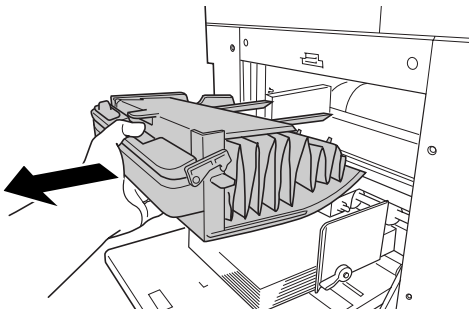

Important!:

- If the Master Disposal Box is padlocked, contact the administrator to undo the padlock.

2 Discard the ejected masters.

Tilt the Master Disposal Box forward and directly discard the used master into the garbage box (or bag) by grasping the Push Out Lever.

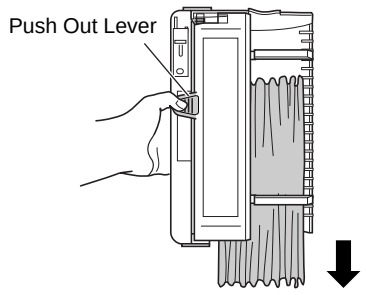

3 Place the Master Disposal Box into position.

Insert the Master Disposal Box as far in as it will go.

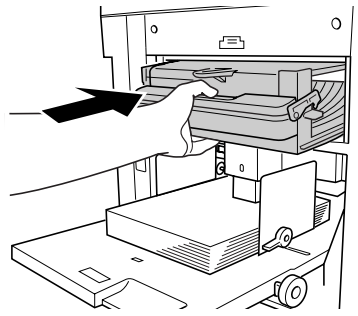

Note:

- If necessary, slide the lever to the back to lock the Master Disposal Box and also have the padlock for further safety.
  ☞p.94
- Dispose the ejected masters according to the disposal rule of your local community. ☞p.95

REG-LL_EN.book Page 94 Wednesday, September 14, 2011 12:03 PM

Tip:
The Master Disposal Box of this machine can be locked by a padlock or other means so that the Master Disposal Box cannot be removed, hence preventing discarded masters from leaking to the outside. (Purchase an ordinary padlock whose loop will fit through the hole, which is 7 mm ($^{9}/_{32}$ inches) wide.)

Important!:

- At the end of printing, the master remains wrapped around the “Print Drum (Cylinder)” in a position that enables printing. The master on the drum (cylinder) is vulnerable to theft even when the Master Disposal Box is locked. To prevent leaks, use the Confidential feature.

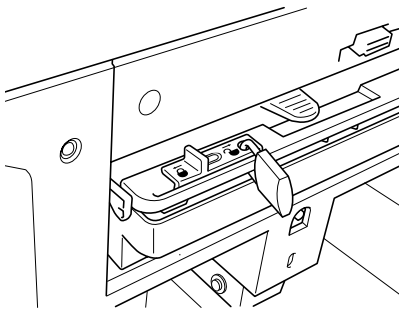

REG-LL_EN.book Page 95 Wednesday, September 14, 2011 12:03 PM

Disposal of Depleted Consumables

Dispose the depleted Ink Cartridges, Master Rolls and ejected masters according to the regulations in your local community.
If required, separate the specific components using the following procedures to dispose them properly.

Ink Cartridge

Remove the label (metal included) at the arrow from the outlet surface of the Ink Cartridge, and then dispose them separately.
Because ink may have adhered to the outlet surface of the Ink Cartridge, be careful not to dirt your clothes.

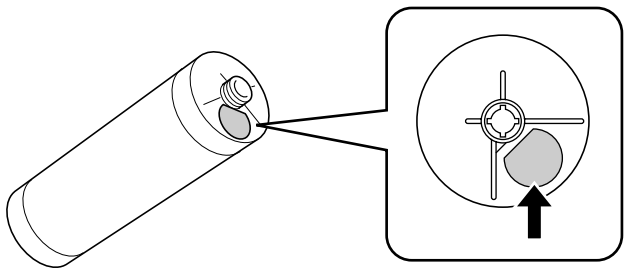

Ink Cartridge material: plastic (polypropylene, polyethylene)
Label material: plastic (metal included)

Master Roll

A metallic component has been attached to the bottom of the end section having the ⓘ mark stamped.
Because the component section has been perforated for cutout convenience, tear along the perforation for proper disposal.

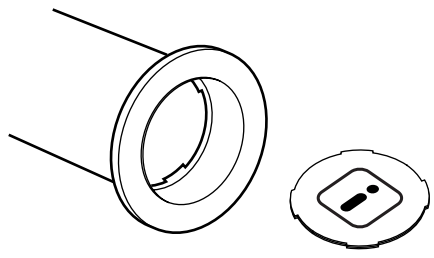

Core material: paper
Master material: plastic, Japanese paper
Material of the cut out component: plastic (metal included) and paper

Ejected Master

Master material: plastic, Japanese paper
Ink material: petroleum hydrocarbon, water, pigment

REG-LL_EN.book Page 96 Wednesday, September 14, 2011 12:03 PM

Removing and Installing the Print Drum (Cylinder)

When replacing with a color drum (cylinder) or dealing with paper jams, remove the Print Drum (Cylinder), take a necessary procedure, and then install the drum (cylinder).

Important!:

- Make sure to place and keep the removed Print Drum (Cylinder) horizontal.
- Keep the power ON while removing or replacing the Print Drum (Cylinder).
- Make sure to place the replaced Print Drum (Cylinder) in the drum (cylinder) case and keep it horizontal.

1 Open the Front Cover.

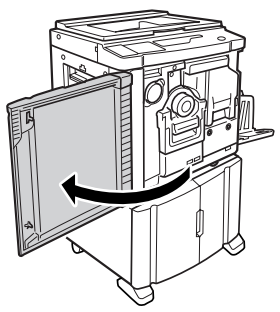

2 Check that the indicator of the Print Drum (Cylinder) Release button is on.

If the indicator is off, press the Print Drum (Cylinder) Release button to turn on its indicator.

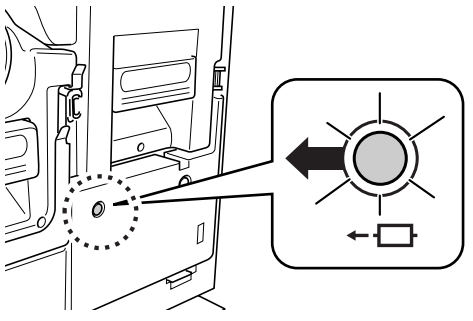

:Print Drum (Cylinder) Release button

Note:

- With the Master Making Unit pulled out, you cannot remove the Print Drum (Cylinder). Place the Master Making Unit into position, and then press the Print Drum (Cylinder) Release button.
☞p.90

3 Pull out the Print Drum (Cylinder).

Grasp the Print Drum (Cylinder) Handle and pull out the Print Drum (Cylinder) until it stops.

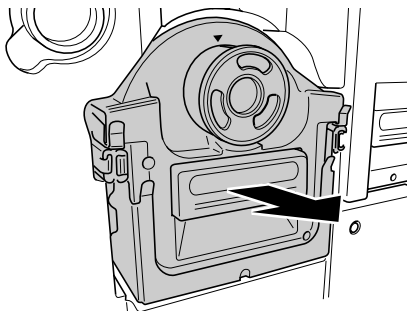

4 Remove the Print Drum (Cylinder).

Lift the Print Drum (Cylinder) with both hands to remove it from the guide.

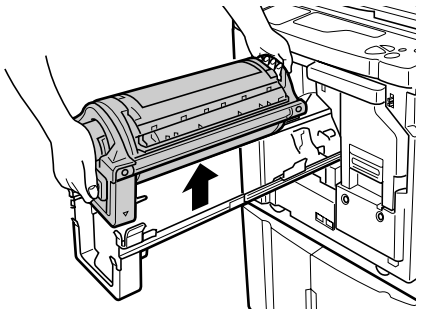

⚠Caution:

- Do not touch the connector on the Print Drum (Cylinder).
  Neglecting this may result in malfunction of the Print Drum (Cylinder) because of static electricity or other factors.

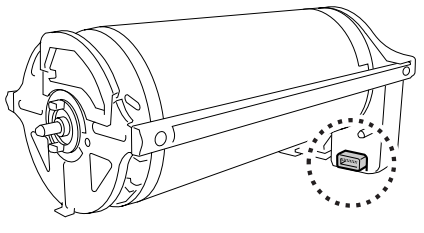

REG-LL_EN.book Page 97 Wednesday, September 14, 2011 12:03 PM

5 Install the Print Drum (Cylinder).

Align the ▼ mark with the ▲ mark on the guide and position the Print Drum (Cylinder) horizontal relative to the guide.

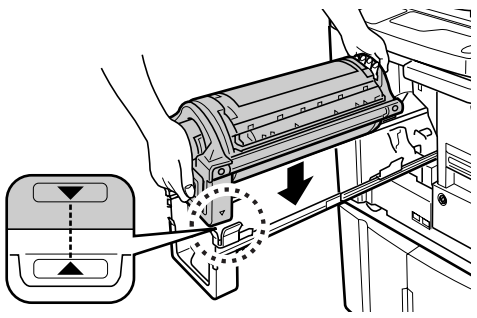

Note:

- If you manually rotate the Print Drum (Cylinder), make sure to rotate it so that the ▶ and ◀ marks meet shown as below after the installation.

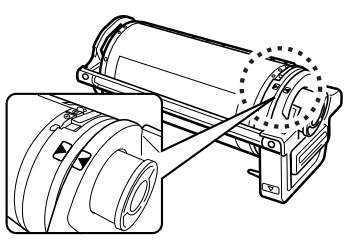

6 Return the units to the original positions.

Place the Print Drum (Cylinder) into position, and then close the Front Cover.

REG-LL_EN.book Page 98 Wednesday, September 14, 2011 12:03 PM

Cleaning

Safety Guide - Cleaning

This section describes the precautions to be observed when cleaning the machine.
Read this section before cleaning the machine.

⚠WARNING:

- Before cleaning any part of the machine, turn off the power.
- Do not remove any fixed covers.
- Contact your dealer (or authorized service representative) immediately if you suspect any dangerous situations or have questions or problems with the machine.
- Contact your dealer (or authorized service representative) before moving the machine.
- Do not allow unauthorized persons to make adjustments or repairs.

⚠Caution:

- The machine has precision moving parts inside. Do not handle the machine in any other way than described in this guide.
- Be careful of the edge of metal parts, otherwise it may cause an injury.
- Do not make any modifications to the machine or remove any parts.
- Neither RISO nor its dealer is responsible for maintenance service performed by non-RISO-authorized personnel.

REG-LL_EN.book Page 99 Wednesday, September 14, 2011 12:03 PM

Cleaning

Thermal Print Head

Clean the Thermal Print Head each time you replace the Master Roll. Open the Master Making Unit Cover, and then gently wipe the Thermal Print Head in the back of the unit several times with a soft cloth or tissue.

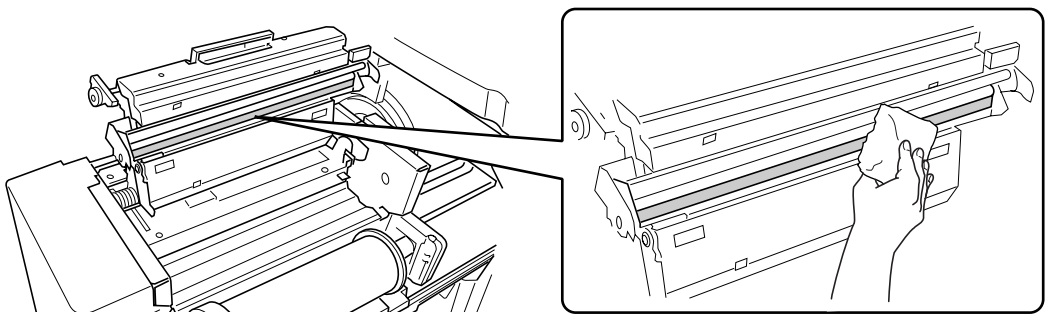

⚠Caution:

- Since the Thermal Print Head is very delicate, avoid shocks or scratches with a hard object.
- Since Thermal Print Head is susceptible to (damage by) static electricity, please be sure to remove the static electricity charged in the body before cleaning.

Note:

- For more effective cleaning, dampen a soft cloth or tissue with a small amount of alcohol before wiping the Thermal Print Head.

Glass Platen and Platen Cover

If the Glass Platen and/or Platen Cover is stained, gently wipe them with a soft cloth or tissue.

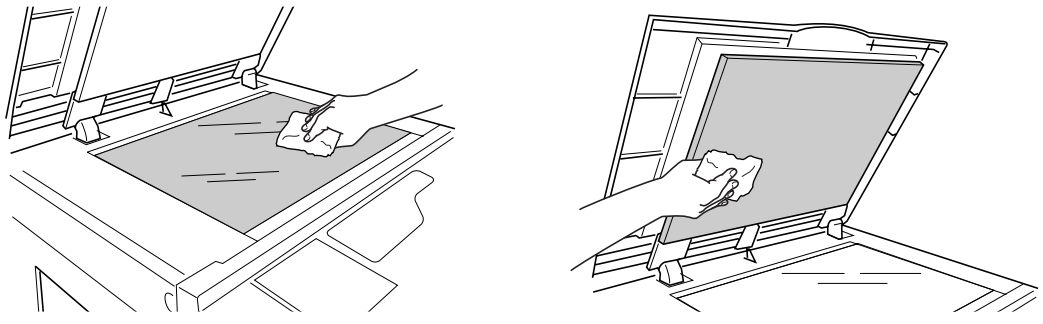

⚠Caution:

- Since the Glass Platen is very delicate, avoid shocks or scratches with a hard object.

REG-LL_EN.book Page 100 Wednesday, September 14, 2011 12:03 PM

Scanner Glass and White Roller of the ADF unit (Option)

Gently wipe the Scanner Glass, and the White Roller several times with a soft cloth or tissue.

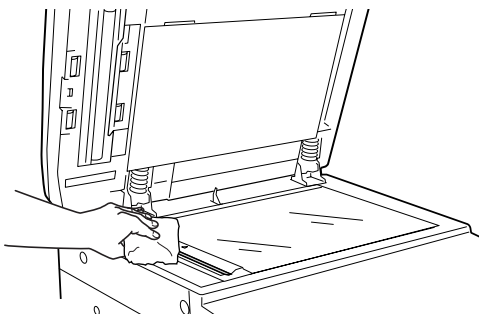

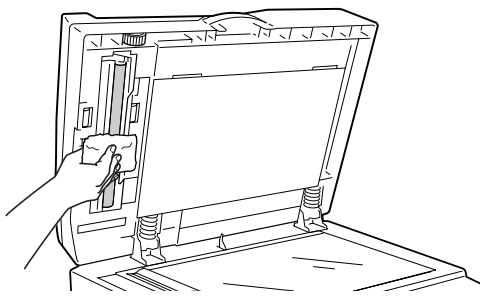

⚠Caution:

- Since the Scanner Glass is very delicate, avoid shocks or scratches with a hard object.

Note:

- For more effective cleaning, dampen a soft cloth or tissue with a small amount of alcohol before wiping the Scanner Glass and White Roller.

Pressure Roller

If the Pressure Roller, which presses print paper against the Print Drum (Cylinder), is stained, smudged strips may appear on the back of copies.
If this happens, gently wipe the Pressure Roller with a soft cloth dampened with alcohol.

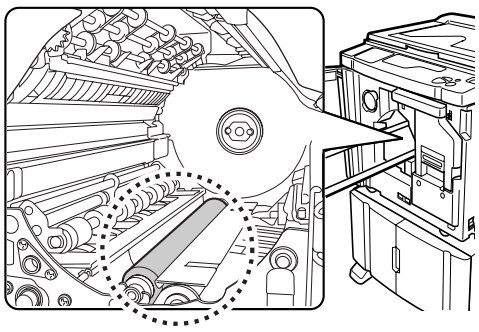

⚠Caution:

- When putting your hand into the unit, do not touch the paper separation hook and paper ejection hook. The sharp tips of the hooks can hurt your hand.

REG-LL_EN.book Page 101 Wednesday, September 14, 2011 12:03 PM

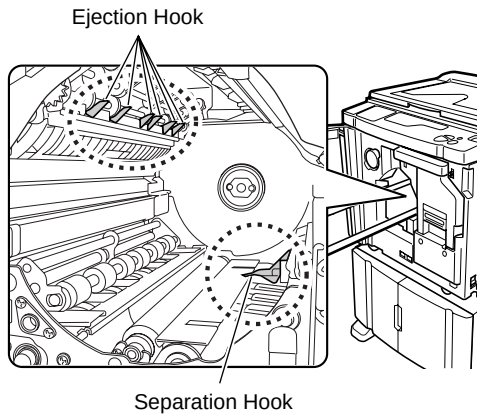

Printer Exterior

In order to protect the machine from dust, wipe the machine exterior periodically with a soft cloth.
If using cleanser, use an appropriate one recommended by your dealer (or authorized service representative).

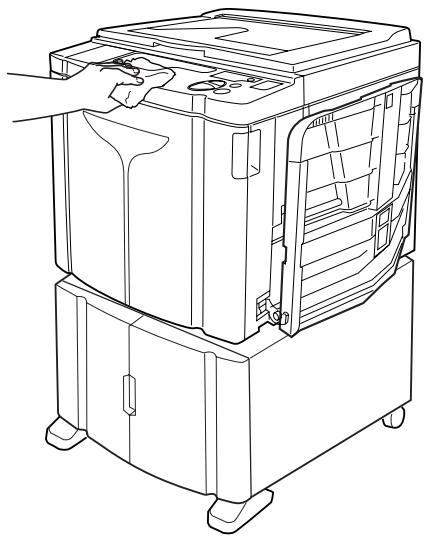

⚠**Caution:**

- Because the machine exterior is plastic, never use alcohol or solvent when cleaning.

REG-LL_EN.book Page 102 Wednesday, September 14, 2011 12:03 PM

Troubleshooting

Check & Error Display

When an error occurs on the machine or when consumables or other sections are not yet ready, the Check & Error Display shows error locations and numbers indicating error types. For some errors, error numbers are shown on the Error Number Display (Print Quantity Display).

Checking with the Check & Error Display

Besides indicators that show error types, numbers that show error locations light.
Check the display and take an appropriate procedure according to the methods described on the subsequent pages.

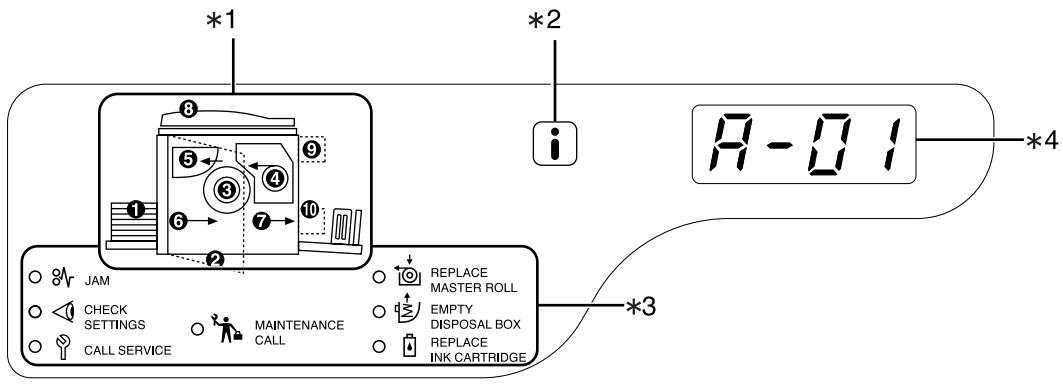

1) Error Location Indicator [∗1]

Numbers corresponding to error locations light.

2) (i) indicator [∗2]

Lights when the function is in use.
☞p.110

3) Error Type Indicator [∗3]

- **(Jam) Indicator**
  Lights when paper jams occur inside the machine or ADF unit (option).
- **(Check Settings) Indicator**
  Lights when the Print Drum (Cylinder), paper, or other items have not yet set up.
- **(Call Service) Indicator**
  Lights when such an error occurs that needs advices or supports from service personnel.
- **(Maintenance Call) Indicator**
  Lights when the time for periodic inspection comes.
- **(Replace Master Roll) Indicator**
  Blinks when the remaining master quantity is small and lights up when the entire master is consumed.
- **(Empty Disposal Box) Indicator**
  Lights when the Master Disposal Box is full.
- **(Replace Ink Cartridge) Indicator**
  Blinks when the remaining ink quantity is small and lights up when the entire ink is consumed.

4) Error Number Display (Print Quantity Display) [∗4]

Error numbers appear and blinks on the Print Quantity Display.
Error contents are shown with alphabetical characters (single digit) and numeric characters (two digits).

REG-LL_EN.book Page 103 Wednesday, September 14, 2011 12:03 PM

When the ⚠ indicator [Area *3] blinks

Check error locations and error numbers (Error Number Display) and take the following procedures:

Location No.	Error No.	Cause	Action
❶	A-06	Any obstacle exists under the Paper Feed Tray or on paper.	Check if any obstacle exists under the Paper Feed Tray or on paper. If an obstacle exists, remove it.
❸	A-02	A master has not been correctly wrapped around the Print Drum (Cylinder).	**1)** Pull out the Print Drum (Cylinder). ☞p.96 **2)** Press the Print Drum (Cylinder) Release Lever (①), hold the edge of the Print Drum (Cylinder), and turn the Drum (Cylinder) until the clamp plate (metallic plate locking the master) comes to the top (②). 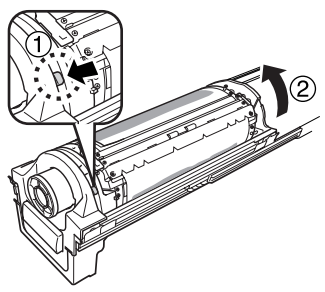 **3)** Press the Clamp Plate Release Lever (①) to unlock the clamp plate, hold the edge of the master, and then separate the master while turning the Print Drum (Cylinder) (②). 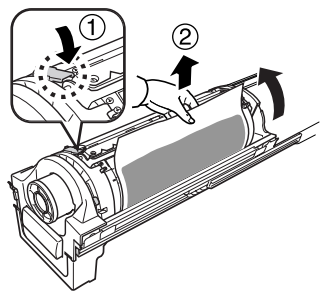 **4)** Turn the Print Drum (Cylinder) until the ▲ marks meet. **5)** Set the Print Drum (Cylinder) into the machine. **6)** Pull out the Master Making Unit and set the master again. **7)** Place the Master Making Unit into position. **8)** Perform the master-making operation again.

REG-LL_EN.book Page 104 Wednesday, September 14, 2011 12:03 PM

Location No.	Error No.	Cause	Action
❸	A-02	A master has not been correctly wrapped around the Print Drum (Cylinder).	⚠**Caution:** • The Print Drum (Cylinder) is equipped with many metallic components. Touch the Print Drum (Cylinder) only when necessary. These components may cut your fingers. • When turning the Print Drum (Cylinder) with hand, do not grab the handle on the rear side of the Print Drum (Cylinder). Be careful that your fingers will not be caught and hurt. • When turning the Print Drum (Cylinder) with hand, hold the edge of the Print Drum (Cylinder). If you push on the master, your fingers may be smudged with ink. • The Clamp Plate opens while the Clamp Plate Release Lever is pressed. Be careful that your fingers will not be caught and hurt. • The seperated master is covered with ink. Be careful that the master will not contact with other objects.
	A-04	A master has not been sent to the Master Disposal Box.	**1)** Pull out the Print Drum (Cylinder) and remove the master on the drum (cylinder). ☞p.96 **2)** Set the Print Drum (Cylinder) again. **3)** Press the ◈ key.
	A-16	An unnecessary master remains on the Print Drum (Cylinder).	**1)** Perform actions 1) through 5) provided for error No. “A-02”. ☞p.103 **2)** Perform the master-making operation again.
	J-04	A paper jam has occurred around the Print Drum (Cylinder).	**1)** Pull out the Print Drum (Cylinder). ☞p.96 **2)** If you find jammed paper, remove it. ⚠**Caution:** • When putting your hand into the machine to remove paper, do not touch the paper separation hook and paper ejection hook. The sharp tips of the hooks can hurt your hand. 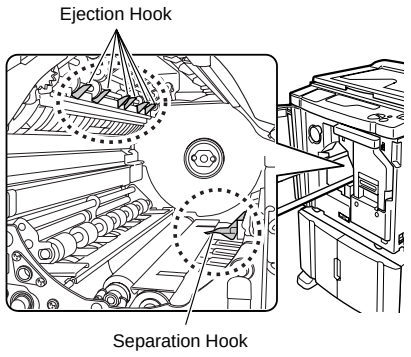

REG-LL_EN.book Page 105 Wednesday, September 14, 2011 12:03 PM

Location No.	Error No.	Cause	Action
❹	A-01 A-34	A master has not been correctly set.	Open the Master Making Unit Cover, remove the master roll, and set the master correctly. If the master is loose, turn the right flange inward to correct it, and close the Master Making Unit Cover. ☞p.90
	A-17	A master has not been correctly cut.	**1)** Remove the master roll and close the Master Making Unit Cover. **2)** Set the master again. ☞p.90
❺	A-05	A master jam has occurred in the master disposal section.	**1)** Remove the Master Disposal Box. **2)** Stand at the side of the Paper Feed Tray and push down the Master Disposal Roller Release Lever at the inside right. 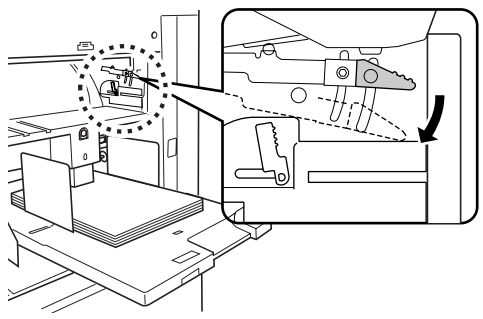 **3)** Remove the master jammed on the roller section. **4)** Push the Master Disposal Roller Lock Lever inward. 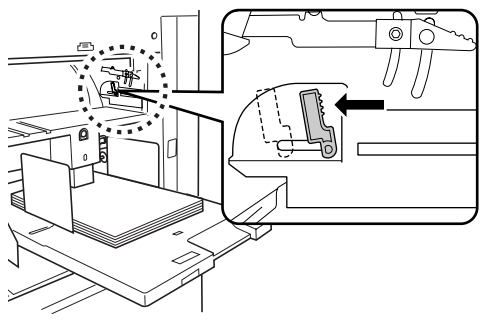 **5)** Set the Master Disposal Box. ☞p.93
❻	J-08	A paper jam has occurred on the Paper Feed Tray section.	**1)** Remove the jammed paper. **2)** Set paper again. **3)** If the error indications do not disappear, press the ⁄⁄ key.

REG-LL_EN.book Page 106 Wednesday, September 14, 2011 12:03 PM

Location No.	Error No.	Cause	Action
❼	J-02	A paper jam has occurred on the Paper Receiving Tray section.	Remove the paper jammed on the Paper Receiving Tray section. If the error indications do not disappear, press the ⁄⁄ key.
❽	J-01	A paper jam has occurred in the ADF unit (option).	Remove the original jammed in the ADF unit. • Removing in the document insertion direction Pull the ADF Original Release Lever to the right, and pull out the original. 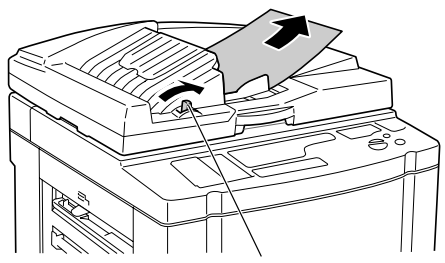 ADF Original Release Lever • Removing in the document ejection direction Raise the Platen Cover, turn the ADF Original Release Dial and remove the original. Original Release Dial 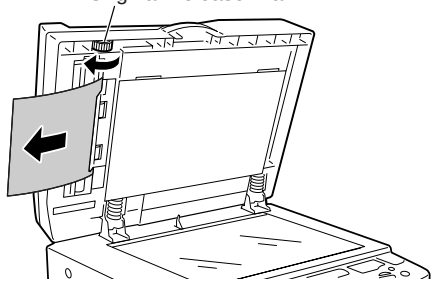

REG-LL_EN.book Page 107 Wednesday, September 14, 2011 12:03 PM

When the ◁(indicator [Area ∗3] blinks

Check error locations and error numbers (Error Number Display) and take the following procedures.
If an error number is not shown, press the **[✳]** key.

Location No.	Error No.	Cause	Action
❶	c-04	The tray has run out of paper.	Place paper on the Paper Feed Tray.
	F-03	Custom-size paper has been placed on the Paper Feed Tray at the time of 2-Up printing.	Custom-size paper does not allow 2-Up printing. Press the // key and then place regular-sized paper.
❷	d-11	The Front Cover is open or has not been completely closed.	Close the Front Cover completely.
❸	d-01	The Print Drum (Cylinder) has not been set or has not been correctly set.	Set the Print Drum (Cylinder) correctly. ☞p.96
	d-02	An inappropriate Print Drum (Cylinder) has been set.	Set an appropriate Print Drum (Cylinder). ☞p.96 **Important!:** • Use a Print Drum (Cylinder) specific to the machine. Set other Print Drums (Cylinders) can result in malfunction or any other troubles.
	d-03	The Ink Cartridge has not been set or has not been correctly set.	Set an Ink Cartridge correctly. ☞p.88
	d-04	An inappropriate Ink Cartridge has been set.	Set an Ink Cartridge specific to the machine. ☞p.88 **Important!:** • Use an Ink Cartridge specific to the machine. Using other Ink Cartridges can result in malfunction or any other troubles.
		The label on the Ink Cartridge outlet surface has come off or surface is with dirt.	The label on the Ink Cartridge outlet surface contains information needed for printing. If the machine cannot read the information, it does not operate. Set an Ink Cartridge that is specific to the machine and that is with label attachment and free from dirt.
	F-01	A master has not been wrapped around the Print Drum (Cylinder).	Place an original and start with the master-making process. If you leave the machine without a master wrapped around the Print Drum (Cylinder), malfunction may occur. Press the // key, and then press the ⎕↑ key. Or perform master-making operation to wrap a master around the drum (cylinder).

REG-LL_EN.book Page 108 Wednesday, September 14, 2011 12:03 PM

Location No.	Error No.	Cause	Action
❹	d-05	A master roll has not been set or has not been correctly set.	Set a master roll correctly and close the Master Making Unit Cover. ☞p.90 If a rewound master has been wrinkled or has worn off, cut the edge of the master straight and then set the master again.
	d-08	The Master Making Unit has not been correctly set.	Set the Master Making Unit correctly. ☞p.90
	d-09	The Master Making Unit Cover has not been closed.	Pull out the Master Making Unit and close the Master Making Unit Cover completely. ☞p.90
	d-17	An inappropriate master roll has been set.	Set a master roll specific to the machine.
		The ⓘ section on the master core is missing, or it has worn off, or it has been tilted.	The ⓘ section on the master core contains information needed for making masters. If the machine cannot read the information, it does not operate. Set a dedicated Master Roll that has the ⓘ mark and is free from wear and tilt.
❺	d-07	The Master Disposal Box has not been set or has not been correctly set.	Set the Master Disposal Box correctly. ☞p.93
❽	F-37	Originals have been placed in the ADF unit (option) in the Book shadow editing.	Press the // key and then place an original on the Glass Platen. Or quit the Book shadow editing. ☞p.40
❾	b-01	A card has not been set to the Key Card Counter (option).	Set a card to the Key Card Counter.
❿	b-22	Power to the Job Separator (option) is off.	Turn on the power to the Job Separator.
	b-23	The Job Separator (option) has run out of tape.	Set new tape to the Job Separator.
	b-24	A tape jam has occurred in the Job Separator (option).	Check the Job Separator and remove the jammed tape.
Non	b-33	An IP address has not been set for the machine.	Using the Custom Setting mode, set the IP address for the machine. ☞p.75
	F-04	The count reached the set upper limit while an identified user was printing.	Press the // key to release the error. Then contact the administrator to clear the TC or MC.
	F-38	The PIN code entered when registering a user has been already registered.	Press the // key to release the error. Then enter an unregistered PIN code.
	F-39	A PIN code of a disabled user has been entered.	Press the // key to release the error.

REG-LL_EN.book Page 109 Wednesday, September 14, 2011 12:03 PM

When the indicator [Area ∗3] lights

Because the entire master roll has been consumed, set a new master roll.
☞p.90

When the indicator [Area ∗3] lights

Because the Master Disposal Box is full, remove the box and discard the ejected masters.
☞p.93

When the indicator [Area ∗3] lights

Because the Ink Cartridge becomes empty, replace with a new Ink Cartridge.
☞p.88

When the indicator [Area ∗3] lights

Check error numbers shown on the Error Number Display and contact your dealer (or authorized service representative).

When the indicator [Area ∗3] lights

Contact your dealer (or authorized service representative) and take a periodic inspection.

REG-LL_EN.book Page 110 Wednesday, September 14, 2011 12:03 PM

When the ⓘ indicator [*2] is off and “H” is shown on the Print Quantity Display [*4].

In order to assure optimum printing, the machine acquires information from the consumables.
If acquired matching information is not proper, “H” is shown on the Print Quantity Display.
Enter an appropriate parameter.
Entering an inappropriate parameter does not affect usual operations but may result in bad print quality.
The table shows the “H” numbers to be shown on the Print Quantity Display and the selectable parameters.

Location No.	H No.	Description	Parameter
❸	**H1**	Ink color (colour) setting Select the same color (colour) as the currently used for Print Drum (Cylinder).	1: black 2: color (colour)
	H2	Print density fine adjustment (ink) Perform fine adjustment to optimize the print density depending on the ink.	1 (light) - 5 (dark)
	H3	Proof copy density adjustment (ink) Perform adjustment for print density for test printing depending on the ink. This adjustment is independent of H2.	1 (light) - 5 (dark)
❹	**H4**	Master-making density setting Set the reference density for the master-making process.	1 (light) - 10 (dark)
	H5	Print density fine adjustment (master) Perform fine adjustment to optimize the print density depending on the master.	1 (light) - 5 (dark)
	H6	Proof copy density adjustment (master) Perform adjustment for the print density for proof copy depending on the master. This adjustment is independent of H5.	1 (light) - 5 (dark)

〓 : For EZ3XX only

Note:

- When you perform the following operations, entered H No’s information disappears and thus you need to enter H No’s again.
  - After the power switch is set to ○ (OFF), the switch is set to | (ON) again
  - After the machine is placed into the Sleep status, the ⏻ key is pressed
- If you are not sure the best setting for the supply(s) used in the machine, we may suggest you start from 1(default setting) except for H1 indication and adjust if necessary based on the result of print.
  Riso takes no responsibility, and cannot advise as to the best setting, for particular supplies not manufactured and sold by Riso.

REG-LL_EN.book Page 111 Wednesday, September 14, 2011 12:03 PM

Use the following procedure to enter necessary information.

1 Enter a parameter using the Print Quantity keys.

The parameters that can be entered differ among the consumables.

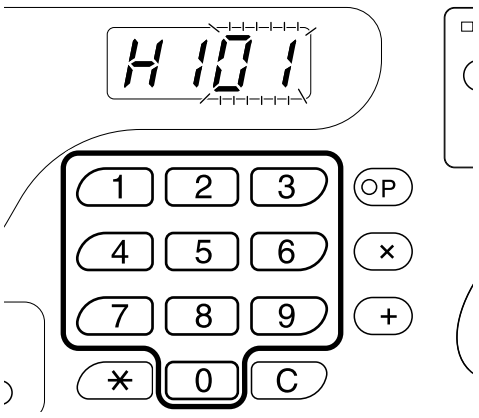

2 Press the ◇ key to complete the setting.

If the next H No. appears, repeat steps 1 and 2.

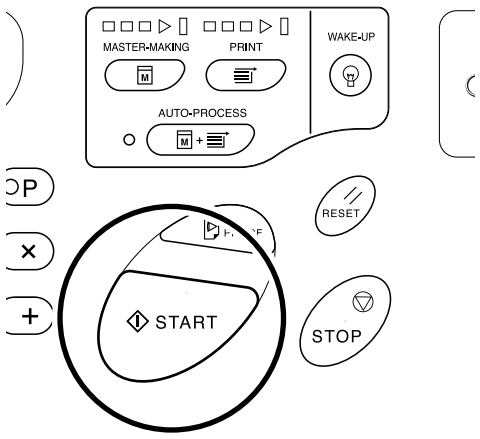

Note:

- When necessary entry is completed, the Print Quantity Display restores the normal status and is available for usual operations.

When the ⓘ indicator [*2] is off and Error Type indicator [*4] lights

When an Error Type indicator lights, please refer to the following pages.

Error Type	Error No.	Reference page
	d-04	☞p.107
	d-17	☞p.108
	If an Error No. “d-xx” other than above is displayed, please refer to the reference pages.	☞p.107~☞p.108
	-	☞p.90
	-	☞p.88

REG-LL_EN.book Page 112 Wednesday, September 14, 2011 12:03 PM

Troubleshooting Tips

If any problems occur during printing, check the following items and take appropriate procedures before calling your dealer (or authorized service representative).

Problem	Cause	Action
The machine does not start when the power switch is pressed.	The power was turned off without notice of the Sleep status.	Try pressing the power switch again. Before pressing the power switch, you may want to find out whether the machine is indeed in the Sleep Mode, by checking the WAKE-UP indicator on the Control Panel. If the WAKE-UP key is lit, the machine is in sleep mode. Press the WAKE-UP key to end sleep mode and to activate the machine.
	Power has been disconnected.	• Check if the power cord has been firmly connected to a electrical outlet. • Check if the power cord has been firmly connected to the machine. • Check if the commercial power circuit breaker is on.
◁ does not go off even when the Front Cover is closed.	The bottom right of the Front Cover has not been firmly closed.	Firmly close the bottom right of the Front Cover.
The Paper Feed Tray cannot be closed.	• The Feed Paper Tray Guides have not been widen up to the limit. • The power was turned off before the Paper Feed Tray was lowered to the bottom.	Turn the power on and lower the Paper Feed Tray to the bottom. Set the Feed Tray Paper Guide Lock Lever to ⇦⊟⇨ , widen the Feed Tray Paper Guides up to the limit, and close the Paper Feed Tray.
The Print Drum (Cylinder) cannot be placed into position.	The Print Drum (Cylinder) was stopped at an inappropriate position after rotation.	After manually rotating the drum (cylinder), make sure that the ▶ mark and the ◀ mark meet as shown. 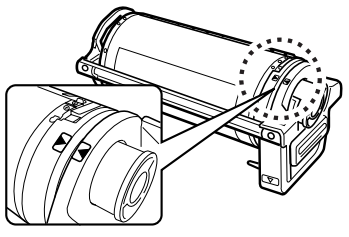
	The Print Drum (Cylinder) has not been correctly set to the guide.	Set the drum (cylinder) to the guide correctly. ☞p.96

REG-LL_EN.book Page 113 Wednesday, September 14, 2011 12:03 PM

Problem	Cause	Action
An error indication does not disappear even though consumables (ink, master roll) are set.	The consumables (ink, master roll) have not been correctly set.	After inserting the Ink Cartridge, turn it clockwise ( ) to lock. Or set the Ink Cartridge again. ☞p.88
		Set a master roll so that the [i] mark comes to the left, and set the Master Making Unit. ☞p.90
	The Ink Cartridge does not contain ink information.	Do not remove the label attached on the Ink Cartridge outlet section. If you did so, set a new Ink Cartridge. ☞p.88
	The master roll does not contain master information.	Do not remove the [i] section from the master core. If you did so, set a new master roll. ☞p.90
The Master Disposal Box cannot be removed.	The Master Disposal Box lever is locked.	Slide the Master Disposal Box lever to the right to unlock. If the Master Disposal Box is padlocked, contact the administrator to release the padlock. ☞p.93
There is no image on copies.	The original is placed face up.	Place the original face down. (This is also true for the ADF unit)
Portion on copies is missing. 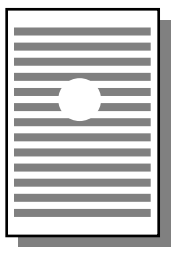	The Glass Platen (and/or the ADF Scanner Glass) is not clean.	Clean the Glass Platen (and/or the ADF Scanner Glass). ☞p.99
	A foreign object may exist on the master.	Pull out the Print Drum (Cylinder) and check if any object exists on the master. If a foreign object exists between the master and the drum (cylinder), remove the master. Then set the drum (cylinder) and perform the master-making operation again. ☞p.103
	• The paper size placed on the Paper Feed Tray was not the same as the size of the original at the time of the master-making process. • The Feed Tray Paper Guides were not fit to the width of paper at the time of the master-making process.	A master is made according to the size of paper placed on the Paper Feed Tray; namely the width of the Feed Tray Paper Guides and the length of paper. If the size of paper placed on the tray is smaller than the size of the original, a master is not made for the entire original. Set the same size of paper on the tray as the original and perform the master-making operation.

REG-LL_EN.book Page 114 Wednesday, September 14, 2011 12:03 PM

Problem	Cause	Action
In the Book shadow editing, the position for shadow erasure is shifted.	Custom-size paper has been placed on the Paper Feed Tray.	The Book shadow editing does not allow custom-size paper to be used. Set standard-size paper.
	Custom-size book or magazine was placed as an original.	Place a book or magazine on the Glass Platen so that its binding section comes to the center of the paper size placed on the Paper Feed Tray (or the size specified for the Size of originals for Book shadow editing using the Custom Setting mode).
	The size of the original differs from the Size of originals for Book shadow editing specified using the Custom Setting mode.	Check the Size of originals for Book shadow editing specified in the Custom Setting mode. • With “0” selected Place standard-size paper of the same size of the original onto the Paper Feed Tray. • With “1” through “4” selected Set the Size of originals for Book shadow editing to the same size as the size of the original. ☞p.66
Shadow erase processing in the Book shadow editing does not erase the central shadow.	The width of the erased central shadow is too narrow.	Using the Custom Setting mode, set the Width of central shadow for Book shadow editing again. ☞p.66
Vertical blank lines are found on printed copies. 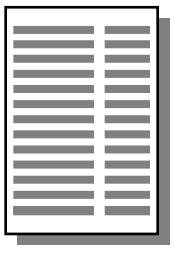	The Thermal Print Head has been smudged.	Open the Master Making Unit Cover and clean the Thermal Print Head. ☞p.99 If this does not solve the problem, contact your dealer (or authorized service representative).
The unwanted background of an original is picked up on copies. 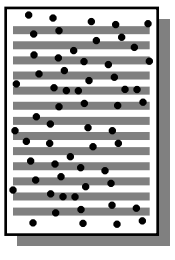	If newspaper or colored (coloured) paper is used as an original, the background is picked up on copies.	Set the scanning level to “Auto” (For EZ3XX only) or lower the level, and then perform the master-making operation again. ☞p.39
Dirt is found on printed copies.	The Glass Platen (and/or the ADF Scanner Glass) is not clean.	Clean the Glass Platen (and/or the ADF Scanner Glass). ☞p.99

REG-LL_EN.book Page 115 Wednesday, September 14, 2011 12:03 PM

Problem	Cause	Action
The edges of printed copies are smudged with ink.	Larger size of paper than the original was placed on the Paper Feed Tray at the time of the master-making process.	Because a master was made according to a larger size than the original, the edges of the original were processed as shadows. Set the same size of paper as the original and perform the master-making operation again. Or attach tape as described below to solve the problem.
	When printing thick paper such as cards, corners of the paper contacted and damaged the master.	Make another master and print with the new master. Or pull out the Print Drum (Cylinder) and attach cellophane tape to the damaged section on the master. However, if attached with cellophane tape, a master may not been properly sent to the Master Disposal Box.
The back of printed paper is smudged with ink.	The Pressure Roller has been stained with ink.	Remove the Print Drum (Cylinder) and clean the Pressure Roller. ☞p.100 If the print position is outside the print paper, this may cause the Pressure Roller to be stained with ink. Be careful when changing the size of print paper or shifting the print position.
	The Feed Tray Paper Guides were not fit to the width of paper at the time of the master-making process.	Adjust the Feed Tray Paper Guides to the width of the paper. If the Feed Tray Paper Guides are set wider than the width of the paper, a master will become wider than necessary. ☞p.20
	Are you using a paper that does not efficiently absorb ink?	The ink did not dry fast enough, marking onto the reverse side of the next paper. Change the paper or try “Ink Saving” feature. ☞p.47

REG-LL_EN.book Page 116 Wednesday, September 14, 2011 12:03 PM

Problem	Cause	Action
Printed images are faint. Printed texts are blurred. 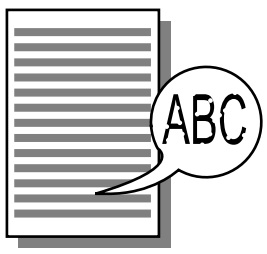	If the machine is not used for an extended period of time, ink on the surface of the Print Drum (Cylinder) may dry. This results in faint or blurred printing just after printing is started.	The ink on the Print Drum (Cylinder) will dry when the machine is not in use for an extended period. Printing with dried ink will produce light or faded copies. Press the [▷] key and make several copies before making copies to be actually used. Or use the “Idling Action”. ☞p.64
	Faint originals result in faint images.	Increase the scanning level and perform the master-making operation again. ☞p.39 For originals written with a pencil, select the Pencil mode. ☞p.35
	If the temperature is low (below 15°C or 59°F) in a place where the machine is installed or Ink Cartridges are stored, ink does not flow smoothly.	Use the machine after keeping it at room temperature for a while. ☞p.12
	The Ink Saving mode has been set.	With the Ink Saving mode selected, the ink on printed copies is fainter than usual.
The left and right print positions have been shifted.	The left and right print positions have not been adjusted for the center.	The Paper Feed Tray is equipped with the Horizontal Print Position Adjustment Dial. Lower the tray, adjust the position, and then perform proof copy to check the position.☞p.48
Paper sticks to the surface of the Print Drum (Cylinder). (The [⚠] indicator blinks frequently.)	The margin at the top of the original or print is too small.	The margin of the original (top of the print in the paper output direction) must be 5 mm($^3/_{16}$") at least. Lower the vertical print position. If this adjustment is impossible, reproduce an original with enough margin and perform the master-making operation again.
	The print paper is inappropriate.	Use the recommended paper.
	The original has a solid black portion at its top.	If an original has a solid black portion at the top, printed copies may not properly output. Replace the original in the reverse direction and restart the master-making process.
Printed and curled copies are output.	The print paper is loaded at a horizontal grain direction.	Load print paper with a vertical grain direction.

REG-LL_EN.book Page 117 Wednesday, September 14, 2011 12:03 PM

Problem	Cause	Action
Paper gets jammed in the ADF unit (Option).	There is any paper caught in the ADF unit (Option).	Pull the ADF Original Release Lever to the right or turn the Release Original Dial and remove the jammed paper. 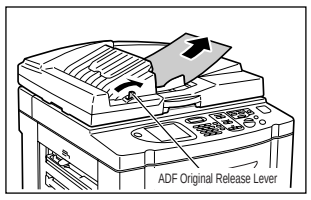 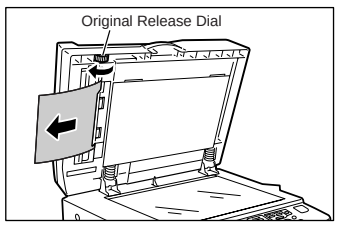
Printed copies are not neatly aligned in the Paper Receiving Tray. (The indicator blinks frequently.)	The positions of the Receiving Tray Paper Guides and the Paper Stopper are inappropriate.	Adjust the Receiving Tray Paper Guides and the Paper Stopper to the size of paper. For thick paper, slightly widen them as necessary. If you have adjusted the horizontal position on the Paper Feed Tray, shift the Receiving Tray Paper Guides in the same direction. ☞p.22
	The Paper Feed Pressure Adjustment Lever is positioned incorrectly.	If the Paper Feed Pressure Adjustment Lever is set to “CARD” ( ), printed copies may not be correctly aligned when using standard paper. Set the Paper Feed Pressure Adjustment Lever to “NORMAL” ( ). ☞p.20
	The positions of the Paper Jumping Wings are inappropriate. (For EZ3XX only)	Position the Paper Jumping Wings according to the size and thickness of paper.☞p.22
	The Paper Arrangers are not properly set. (For EZ3XX only)	Set the Paper Arrangers properly. ☞p.22
	The corrugators are not properly set. (For EZ2XX only)	Set the corrugators properly. ☞p.22

REG-LL_EN.book Page 118 Wednesday, September 14, 2011 12:03 PM

Problem	Cause	Action
Paper goes over the receiving tray stopper.	---	Follow the steps to level the receiving tray as follows: **1)** Fold the Receiving Tray Paper Guides/Stopper. **2)** Lift up the sides of the receiving tray with both hands, and move the receiving tray shaft to the position B. Position A is recommended in most cases. 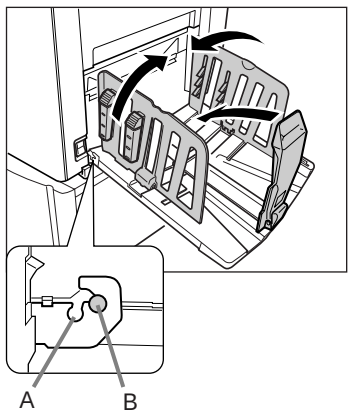 A: Ordinary position B: Move to this position when paper goes over the tray.

REG-LL_EN.book Page 119 Wednesday, September 14, 2011 12:03 PM

Problem	Cause	Action
Paper is not smoothly fed from the Paper Feed Tray. (skipped paper, or multiple-sheet feeding)	The print paper is inappropriate.	Use paper that falls within the recommended range. ☞p.16
	The position of the Paper Feed Pressure Adjustment Lever was inappropriate.	When using thick or slippery paper, set the Paper Feed Pressure Adjustment Lever to CARD ( ). ☞p.20
	The angle of the Stripper Plate is inappropriate.	Turn the Stripper Plate Angle Adjustment dial as follows; • **When the feeding skips** Turn the dial to the left. 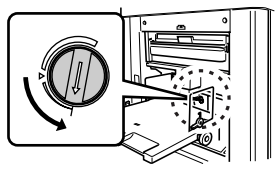 • **When multiple sheets are fed** Turn the dial to the right. 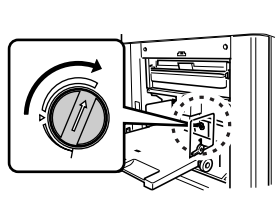 **Important!:** • Before making the adjustment, be sure to remove all paper from the Paper Feed Tray and confirm that the tray has lowered to the bottom.
	The Paper Feed Adjustment on the Functions screen is not properly set.	Adjust the “Paper Feed Adj.”. Contact your dealer (or authorized service representative) for details on making the adjustment.
The back of printed cards is peeling or the leading edge of the printed cards is wrinkled.	The angle of the Stripper Plate is inappropriate.	Refer to the procedure provided for “Paper is not smoothly fed from the Paper Feed Tray. (No paper is fed.)”, and adjust the angle of the Stripper Plate.
The indicator lights even when a paper jam has not occurred.	Lifted paper was ejected at the time of the second rotation of the Print Drum (Cylinder).	Check the printed copies, and if the top margin is less than 5 mm($^3/_{16}$"), slightly lower the print position.
	Because sunlight was projected to the machine, the sensor did not function correctly.	Use a curtain for example to shut out sunlight or move the machine to a place free from direct sunlight.

REG-LL_EN.book Page 120 Wednesday, September 14, 2011 12:03 PM

Problem	Cause	Action
The machine repeats the master-making process for each original.	“Collate Copies” or “Collate” was selected for printer driver settings for the received document data.	Cancel the current print job and resend the document data without “Collate Copies” or “Collate” selected for the printer driver settings.
The ◇ key blinks.	Received data is waiting for output.	Press the ◇ key to output the data. To delete data waiting for output, press the 🖳 key.
“ – – – – ”appears on the Print Quantity Display and the machine does not start.	When the machine is in use, the power was turned off.	Press the ◇ key.

REG-LL_EN.book Page 121 Wednesday, September 14, 2011 12:03 PM

REG-LL_EN.book Page 122 Wednesday, September 14, 2011 12:03 PM

Appendixes

Optional Accessories

A variety of optional accessories are available to enhance the capabilities of the machine.
For details about the optional accessories, see their respective user's manuals.

- **Color Drum (Cylinder)**

  A variety of colors (colours) are available, such as blue, red, green, and brown. Store a drum (cylinder) in its own case.

- **Auto Document Feeder AF-VI**

  Feeds up to 50 sheets of originals automatically.

- **Job Separator IV**

  With the Programed Printing function, allows the machine to print and sort into groups separated by tape.

- **Key Card Counter IV**

  With a single button press, shows the numbers of printed copies and consumed masters within a given period of time. This can help you manage costs.

- **Card Feed Kit**

  Use for thick paper such as cards. Replace with this unit when thick paper needs to pass through the machine.

- **Envelope Feed Kit**

  Use for envelopes.

- **Ink/Master Holder**

  A rack kit for storing supply such as ink and masters.

- **Stand**

- **RISO PC Interface Card USB2.0**

  Use to connect a computer to the machine using a USB cable.

- **RISO Network Card**

  Use to directly connect the machine to the network.
  This comes with the RISO-MONITOR software that allows you to check the status of the machine from computers.

- **Wide Stacking Tray**

  This unit can take paper up to 340 mm × 555 mm ($13^{6}/_{16}$" × $21^{14}/_{16}$") in size.

REG-LL_EN.book Page 123 Wednesday, September 14, 2011 12:03 PM

Specifications

RISO EZ391

Master-making/printing methods	High-speed digital master-making/full automatic stencil printing
Original Type	Book (10 kg (22lb) or less), sheet
Original Size (max./min.)	When using the Glass Platen : 50 mm × 90 mm ($1^{31}/_{32}$" × $3^{9}/_{16}$") - 310 mm × 432 mm ($12^{3}/_{16}$" × 17") When using the ADF unit (option) : 100 mm × 148 mm ($3^{15}/_{16}$" × $5^{27}/_{32}$") - 310 mm × 432 mm ($12^{3}/_{16}$" × 17")
Original Paper Weight	When using the Glass Platen : 10 kg (22lb) or less When using the ADF unit (option) : 50g/m^2 (13-lb bond) - 128g/m^2 (34-lb bond)
Print Paper Size (max./min.)	100 mm × 148 mm ($3^{15}/_{16}$" × $5^{27}/_{32}$") - 310 mm × 432 mm ($12^{3}/_{16}$" × 17")
Paper Supply Capacity	1000 sheets (64g/m^2 (17-lb bond))
Print Paper Weight	46g/m^2 (12-lb bond) - 210g/m^2 (110-lb index)
Image Processing Mode	Line, Photo, Duo, Pencil
Master-making Time	Approx. 20 seconds (for A4/landscape/100% reproduction ratio)
Printing Area (max.)	291 mm × 425 mm ($11^{7}/_{16}$" × $16^{3}/_{4}$")
Print Reproduction Ratio	Zoom : 50 - 200% Standard reproduction ratio (enlargement) : 154%, 129%, 121% Standard reproduction ratio (reduction) : 94%, 78%, 65%, 61%
Print Speed	Approx. 60 - 130 sheets per minute (five steps variable)
Print Position Adjustment	Vertical : ±15 mm (±$^{1}/_{2}$") Horizontal : ±10 mm (±$^{3}/_{8}$")
Ink Supply	Full automatic (1000 ml per cartridge)
Master Supply/Disposal	Full automatic (approx. 215 sheets per roll)
Master Disposal Capacity	100 sheets
User Interface	LED panel with Progress Arrow indicators, front-side operation
Optional Accessories	Auto Document Feeder AF-VI, Job Separator IV, Key Card Counter IV, Color Drum (Cylinder), Card Feed Kit, Envelop Feed Kit, Ink/Master Holder, Stand, RISO Network Card, RISO PC Interface Card USB2.0, Wide Stacking Tray
Power Source	EZ391U:100-120/220-240V~, 2.5/1.3A, 50-60Hz
Dimensions	When in use : 1415 mm(W) × 655 mm(D) × 665 mm(H) ($55^{23}/_{32}$"(W) × $25^{25}/_{32}$"(D) × $26^{3}/_{16}$"(H)) When in storage : 780 mm(W) × 655 mm(D) × 665 mm(H) ($30^{23}/_{32}$"(W) × $25^{25}/_{32}$"(D) × $26^{3}/_{16}$"(H))
Weight	Approx. 101 kg (222lb)
Safety Standard	IEC 60950-1 compliant, Indoor, pollution degree 2*1, At altitudes of 2000m or lower

Note:

- The specifications are subject to change without prior notice.

*1 The pollution degree of the usage environment due to dirt and dust in the air. Degree “2” corresponds to a general indoor environment.

REG-LL_EN.book Page 124 Wednesday, September 14, 2011 12:03 PM

RISO EZ371

Master-making/printing methods	High-speed digital master-making/full automatic stencil printing
Original Type	Book (10 kg (22lb) or less), sheet
Original Size (max./min.)	When using the Glass Platen : 50 mm × 90 mm ($1^{31}/_{32}$" × $3^{9}/_{16}$") - 310 mm × 432 mm ($12^{3}/_{16}$" × 17") When using the ADF unit (option) : 100 mm × 148 mm ($3^{15}/_{16}$" × $5^{27}/_{32}$") - 310 mm × 432 mm ($12^{3}/_{16}$" × 17")
Original Paper Weight	When using the Glass Platen : 10 kg (22lb) or less When using the ADF unit (option) : 50g/m² (13-lb bond) - 128g/m² (34-lb bond)
Print Paper Size (max./min.)	100 mm × 148 mm ($3^{15}/_{16}$" × $5^{27}/_{32}$") - 310 mm × 432 mm ($12^{3}/_{16}$" × 17")
Paper Supply Capacity	1000 sheets (64g/m² (17-lb bond))
Print Paper Weight	46g/m² (12-lb bond) - 210g/m² (110-lb index)
Image Processing Mode	Line, Photo, Duo, Pencil
Master-making Time	Approx. 20 seconds (for A4/landscape/100% reproduction ratio)
Printing Area (max.)	291 mm × 413 mm ($11^{7}/_{16}$" × $16^{1}/_{4}$")
Print Reproduction Ratio	Zoom : 50 - 200% Standard reproduction ratio (enlargement) : 141%, 122%, 116% Standard reproduction ratio (reduction) : 94%, 87%, 82%, 71%
Print Speed	Approx. 60 - 130 sheets per minute (five steps variable)
Print Position Adjustment	Vertical : ±15 mm (±$^{1}/_{2}$") Horizontal : ±10 mm (±$^{3}/_{8}$")
Ink Supply	Full automatic (1000 ml per cartridge)
Master Supply/Disposal	Full automatic (approx. 220 sheets per roll)
Master Disposal Capacity	100 sheets
User Interface	LED panel with Progress Arrow indicators, front-side operation
Optional Accessories	Auto Document Feeder AF-VI, Job Separator IV, Key Card Counter IV, Color Drum (Cylinder), Card Feed Kit, Envelop Feed Kit, Ink/Master Holder, Stand, RISO Network Card, RISO PC Interface Card USB2.0, Wide Stacking Tray
Power Source	EZ371E:220-240V~, 1.3A, 50-60Hz EZ371A (For Korea):220V~, 1.3A, 60Hz EZ371A (For Taiwan):110V~, 2.5A, 60Hz EZ371A (For other countries):220-240V~, 1.3A, 50-60Hz
Dimensions	When in use : 1415 mm(W) × 655 mm(D) × 665 mm(H) ($55^{23}/_{32}$"(W) × $25^{25}/_{32}$"(D) × $26^{3}/_{16}$"(H)) When in storage : 780 mm(W) × 655 mm(D) × 665 mm(H) ($30^{23}/_{32}$"(W) × $25^{25}/_{32}$"(D) × $26^{3}/_{16}$"(H))
Weight	Approx. 101 kg (222lb)
Safety Standard	IEC 60950-1 compliant, Indoor, pollution degree 2*1, At altitudes of 2000m or lower

Note:

- The specifications are subject to change without prior notice.

*1 The pollution degree of the usage environment due to dirt and dust in the air. Degree “2” corresponds to a general indoor environment.

REG-LL_EN.book Page 125 Wednesday, September 14, 2011 12:03 PM

RISO EZ331

Master-making/printing methods	High-speed digital master-making/full automatic stencil printing
Original Type	Book (10 kg (22lb) or less), sheet
Original Size (max./min.)	When using the Glass Platen : 50 mm × 90 mm ($1^{31}/_{32}$" × $3^{9}/_{16}$") - 310 mm × 432 mm ($12^{3}/_{16}$" × 17") When using the ADF unit (option) : 100 mm × 148 mm ($3^{15}/_{16}$" × $5^{27}/_{32}$") - 310 mm × 432 mm ($12^{3}/_{16}$" × 17")
Original Paper Weight	When using the Glass Platen : 10 kg (22lb) or less When using the ADF unit (option) : 50g/m² (13-lb bond) - 128g/m² (34-lb bond)
Print Paper Size (max./min.)	100 mm × 148 mm ($3^{15}/_{16}$" × $5^{27}/_{32}$") - 310 mm × 432 mm ($12^{3}/_{16}$" × 17")
Paper Supply Capacity	1000 sheets (64g/m² (17-lb bond))
Print Paper Weight	46g/m² (12-lb bond) - 210g/m² (110-lb index)
Image Processing Mode	Line, Photo, Duo, Pencil
Master-making Time	Approx. 20 seconds (for A4/portrait/100% reproduction ratio)
Printing Area (max.)	251 mm × 357 mm ($9^{7}/_{8}$" × $14^{1}/_{16}$")
Print Reproduction Ratio	Zoom : 50 - 200% Standard reproduction ratio (enlargement) : 141%, 122%, 116% Standard reproduction ratio (reduction) : 94%, 87%, 82%, 71%
Print Speed	Approx. 60 - 130 sheets per minute (five steps variable)
Print Position Adjustment	Vertical : ±15 mm (±$^{1}/_{2}$") Horizontal : ±10 mm (±$^{3}/_{8}$")
Ink Supply	Full automatic (1000 ml per cartridge)
Master Supply/Disposal	Full automatic (approx. 250 sheets per roll)
Master Disposal Capacity	100 sheets
User Interface	LED panel with Progress Arrow indicators, front-side operation
Optional Accessories	Auto Document Feeder AF-VI, Job Separator IV, Key Card Counter IV, Color Drum (Cylinder), Card Feed Kit, Envelop Feed Kit, Ink/Master Holder, Stand, RISO Network Card, RISO PC Interface Card USB2.0, Wide Stacking Tray
Power Source	EZ331A (For Korea):220V~, 1.3A, 60Hz EZ331A (For other countries):220-240V~, 1.3A, 50-60Hz
Dimensions	When in use : 1415 mm(W) × 655 mm(D) × 665 mm(H) ($55^{23}/_{32}$"(W) × $25^{25}/_{32}$"(D) × $26^{3}/_{16}$"(H)) When in storage : 780 mm(W) × 655 mm(D) × 665 mm(H) ($30^{23}/_{32}$"(W) × $25^{25}/_{32}$"(D) × $26^{3}/_{16}$"(H))
Weight	Approx. 101 kg (222lb)
Safety Standard	IEC 60950-1 compliant, Indoor, pollution degree 2*1, At altitudes of 2000m or lower

Note:

- The specifications are subject to change without prior notice.

*1 The pollution degree of the usage environment due to dirt and dust in the air. Degree “2” corresponds to a general indoor environment.

REG-LL_EN.book Page 126 Wednesday, September 14, 2011 12:03 PM

RISO EZ301

Master-making/printing methods	High-speed digital master-making/full automatic stencil printing
Original Type	Book (10 kg (22lb) or less), sheet
Original Size (max./min.)	When using the Glass Platen : 50 mm × 90 mm ($1^{31}/_{32}$" × $3^{9}/_{16}$") - 310 mm × 432 mm ($12^{3}/_{16}$" × 17") When using the ADF unit (option) : 100 mm × 148 mm ($3^{15}/_{16}$" × $5^{27}/_{32}$") - 310 mm × 432 mm ($12^{3}/_{16}$" × 17")
Original Paper Weight	When using the Glass Platen : 10 kg (22lb) or less When using the ADF unit (option) : 50g/m² (13-lb bond) - 128g/m² (34-lb bond)
Print Paper Size (max./min.)	100 mm × 148 mm ($3^{15}/_{16}$" × $5^{27}/_{32}$") - 310 mm × 432 mm ($12^{3}/_{16}$" × 17")
Paper Supply Capacity	1000 sheets (64g/m² (17-lb bond))
Print Paper Weight	46g/m² (12-lb bond) - 210g/m² (110-lb index)
Image Processing Mode	Line, Photo, Duo, Pencil
Master-making Time	Approx. 22 seconds (for A4/portrait/100% reproduction ratio)
Printing Area (max.)	210 mm × 290 mm ($8^{1}/_{4}$" × $11^{7}/_{16}$")
Print Reproduction Ratio	Standard reproduction ratio (enlargement) : 141%, 122%, 116% Standard reproduction ratio (reduction) : 94%, 87%, 82%, 71%
Print Speed	Approx. 60 - 130 sheets per minute (five steps variable)
Print Position Adjustment	Vertical : ±15 mm (±$^{1}/_{2}$") Horizontal : ±10 mm (±$^{3}/_{8}$")
Ink Supply	Full automatic (1000 ml per cartridge)
Master Supply/Disposal	Full automatic (approx. 295 sheets per roll)
Master Disposal Capacity	100 sheets
User Interface	LED panel with Progress Arrow indicators, front-side operation
Optional Accessories	Auto Document Feeder AF-VI, Job Separator IV, Key Card Counter IV, Color Drum (Cylinder), Card Feed Kit, Envelop Feed Kit, Ink/Master Holder, Stand, RISO Network Card, RISO PC Interface Card USB2.0, Wide Stacking Tray
Power Source	EZ301E:220-240V~, 1.3A, 50-60Hz
Dimensions	When in use : 1415 mm(W) × 655 mm(D) × 665 mm(H) ($55^{23}/_{32}$"(W) × $25^{25}/_{32}$"(D) × $26^{3}/_{16}$"(H)) When in storage : 780 mm(W) × 655 mm(D) × 665 mm(H) ($30^{23}/_{32}$"(W) × $25^{25}/_{32}$"(D) × $26^{3}/_{16}$"(H))
Weight	Approx. 101 kg (222lb)
Safety Standard	IEC 60950-1 compliant, Indoor, pollution degree 2*1, At altitudes of 2000m or lower

Note:

- The specifications are subject to change without prior notice.

*1 The pollution degree of the usage environment due to dirt and dust in the air. Degree “2” corresponds to a general indoor environment.

REG-LL_EN.book Page 127 Wednesday, September 14, 2011 12:03 PM

RISO EZ231

Master-making/printing methods	High-speed digital master-making/full automatic stencil printing
Original Type	Book (10 kg (22lb) or less), sheet
Original Size (max./min.)	When using the Glass Platen : 50 mm × 90 mm ($1^{31}/_{32}$" × $3^{9}/_{16}$") - 310 mm × 432 mm ($12^{3}/_{16}$" × 17") When using the ADF unit (option) : 100 mm × 148 mm ($3^{15}/_{16}$" × $5^{27}/_{32}$") - 310 mm × 432 mm ($12^{3}/_{16}$" × 17")
Original Paper Weight	When using the Glass Platen : 10 kg (22lb) or less When using the ADF unit (option) : 50g/m² (13-lb bond) - 128g/m² (34-lb bond)
Print Paper Size (max./min.)	100 mm × 148 mm ($3^{15}/_{16}$" × $5^{27}/_{32}$") - 310 mm × 432 mm ($12^{3}/_{16}$" × 17")
Paper Supply Capacity	1000 sheets (64g/m² (17-lb bond))
Print Paper Weight	46g/m² (12-lb bond) - 157g/m² (87-lb index)
Image Processing Mode	Line, Photo, Duo, Pencil
Master-making Time	Approx. 25 seconds (for A4/portrait/100% reproduction ratio)
Printing Area (max.)	251 mm × 357 mm ($9^{7}/_{8}$" × $14^{1}/_{16}$")
Print Reproduction Ratio	Standard reproduction ratio (enlargement) : 141%, 122%, 116% Standard reproduction ratio (reduction) : 94%, 87%, 82%, 71%
Print Speed	Approx. 60 - 130 sheets per minute (five steps variable)
Print Position Adjustment	Vertical : ±15 mm (±$^{1}/_{2}$") Horizontal : ±10 mm (±$^{3}/_{8}$")
Ink Supply	Full automatic (1000 ml per cartridge)
Master Supply/Disposal	Full automatic (approx. 250 sheets per roll)
Master Disposal Capacity	100 sheets
User Interface	LED panel with Progress Arrow indicators, front-side operation
Optional Accessories	Auto Document Feeder AF-VI, Job Separator IV, Key Card Counter IV, Color Drum (Cylinder), Card Feed Kit, Envelop Feed Kit, Ink/Master Holder, Stand, RISO Network Card, RISO PC Interface Card USB2.0, Wide Stacking Tray
Power Source	EZ231E:220-240V~, 1.3A, 50-60Hz EZ231U:220-240V~, 1.3A, 50-60Hz EZ231A (For Korea):220V~, 1.3A, 60Hz EZ231A (For Taiwan):110V~, 2.5A, 60Hz EZ231A (For other countries):220-240V~, 1.3A, 50-60Hz
Dimensions	When in use : 1415 mm(W) × 655 mm(D) × 665 mm(H) ($55^{23}/_{32}$"(W) × $25^{25}/_{32}$"(D) × $26^{3}/_{16}$"(H)) When in storage : 780 mm(W) × 655 mm(D) × 665 mm(H) ($30^{23}/_{32}$"(W) × $25^{25}/_{32}$"(D) × $26^{3}/_{16}$"(H))
Weight	Approx. 100 kg (220lb)
Safety Standard	IEC 60950-1 compliant, Indoor, pollution degree 2*1, At altitudes of 2000m or lower

Note:

- The specifications are subject to change without prior notice.

*1 The pollution degree of the usage environment due to dirt and dust in the air. Degree “2” corresponds to a general indoor environment.

REG-LL_EN.book Page 128 Wednesday, September 14, 2011 12:03 PM

RISO EZ221

Master-making/printing methods	High-speed digital master-making/full automatic stencil printing
Original Type	Book (10 kg (22lb) or less), sheet
Original Size (max./min.)	When using the Glass Platen : 50 mm × 90 mm ($1^{31}/_{32}$" × $3^{9}/_{16}$") - 310 mm × 432 mm ($12^{3}/_{16}$" × 17") When using the ADF unit (option) : 100 mm × 148 mm ($3^{15}/_{16}$" × $5^{27}/_{32}$") - 310 mm × 432 mm ($12^{3}/_{16}$" × 17")
Original Paper Weight	When using the Glass Platen : 10 kg (22lb) or less When using the ADF unit (option) : 50g/m^2 (13-lb bond) - 128g/m^2 (34-lb bond)
Print Paper Size (max./min.)	100 mm × 148 mm ($3^{15}/_{16}$" × $5^{27}/_{32}$") - 310 mm × 432 mm ($12^{3}/_{16}$" × 17")
Paper Supply Capacity	1000 sheets (64g/m^2 (17-lb bond))
Print Paper Weight	46g/m^2 (12-lb bond) - 157g/m^2 (87-lb index)
Image Processing Mode	Line, Photo, Duo, Pencil
Master-making Time	Approx. 25 seconds (for A4/portrait/100% reproduction ratio)
Printing Area (max.)	210 mm × 357 mm ($8^{1}/_{4}$" × $14^{1}/_{16}$")
Print Reproduction Ratio	Standard reproduction ratio (enlargement) EZ221U : 154%, 129% EZ221A : 141%, 122%, 116% Standard reproduction ratio (reduction) EZ221U : 94%, 78%, 65% EZ221A : 94%, 87%, 82%, 71%
Print Speed	Approx. 60 - 130 sheets per minute (five steps variable)
Print Position Adjustment	Vertical : ±15 mm (±$^{1}/_{2}$") Horizontal : ±10 mm (±$^{3}/_{8}$")
Ink Supply	Full automatic (1000 ml per cartridge)
Master Supply/Disposal	Full automatic (approx. 250 sheets per roll)
Master Disposal Capacity	100 sheets
User Interface	LED panel with Progress Arrow indicators, front-side operation
Optional Accessories	Auto Document Feeder AF-VI, Job Separator IV, Key Card Counter IV, Color Drum (Cylinder), Card Feed Kit, Envelop Feed Kit, Ink/Master Holder, Stand, RISO Network Card, RISO PC Interface Card USB2.0, Wide Stacking Tray
Power Source	EZ221U:100-120/220-240V~, 2.5/1.3A, 50-60Hz EZ221A:220-240V~, 1.3A, 50-60Hz
Dimensions	When in use : 1415 mm(W) × 655 mm(D) × 665 mm(H) ($55^{23}/_{32}$"(W) × $25^{25}/_{32}$"(D) × $26^{3}/_{16}$"(H)) When in storage : 780 mm(W) × 655 mm(D) × 665 mm(H) ($30^{23}/_{32}$"(W) × $25^{25}/_{32}$"(D) × $26^{3}/_{16}$"(H))
Weight	Approx. 100 kg (220lb)
Safety Standard	IEC 60950-1 compliant, Indoor, pollution degree 2*1, At altitudes of 2000m or lower

Note:

- The specifications are subject to change without prior notice.

*1 The pollution degree of the usage environment due to dirt and dust in the air. Degree “2” corresponds to a general indoor environment.

REG-LL_EN.book Page 129 Wednesday, September 14, 2011 12:03 PM

RISO EZ201

Master-making/printing methods	High-speed digital master-making/full automatic stencil printing
Original Type	Book (10 kg (22lb) or less), sheet
Original Size (max./min.)	When using the Glass Platen : 50 mm × 90 mm ($1^{31}/_{32}$" × $3^{9}/_{16}$") - 310 mm × 432 mm ($12^{3}/_{16}$" × 17") When using the ADF unit (option) : 100 mm × 148 mm ($3^{15}/_{16}$" × $5^{27}/_{32}$") - 310 mm × 432 mm ($12^{3}/_{16}$" × 17")
Original Paper Weight	When using the Glass Platen : 10 kg (22lb) or less When using the ADF unit (option) : 50g/m² (13-lb bond) - 128g/m² (34-lb bond)
Print Paper Size (max./min.)	100 mm × 148 mm ($3^{15}/_{16}$" × $5^{27}/_{32}$") - 310 mm × 432 mm ($12^{3}/_{16}$" × 17")
Paper Supply Capacity	1000 sheets (64g/m² (17-lb bond))
Print Paper Weight	46g/m² (12-lb bond) - 157g/m² (87-lb index)
Image Processing Mode	Line, Photo, Duo, Pencil
Master-making Time	Approx. 25 seconds (for A4/portrait/100% reproduction ratio)
Printing Area (max.)	210 mm × 290 mm ($8^{9}/_{32}$" × $11^{13}/_{32}$")
Print Reproduction Ratio	Standard reproduction ratio (enlargement) : 141%, 122%, 116% Standard reproduction ratio (reduction) : 94%, 87%, 82%, 71%
Print Speed	Approx. 60 - 130 sheets per minute (five steps variable)
Print Position Adjustment	Vertical : ±15 mm (±$^{1}/_{2}$") Horizontal : ±10 mm (±$^{3}/_{8}$")
Ink Supply	Full automatic (1000 ml per cartridge)
Master Supply/Disposal	Full automatic (approx. 295 sheets per roll)
Master Disposal Capacity	100 sheets
User Interface	LED panel with Progress Arrow indicators, front-side operation
Optional Accessories	Auto Document Feeder AF-VI, Job Separator IV, Key Card Counter IV, Color Drum (Cylinder), Card Feed Kit, Envelop Feed Kit, Ink/Master Holder, Stand, RISO Network Card, RISO PC Interface Card USB2.0, Wide Stacking Tray
Power Source	EZ201E : 220-240V~, 1.3A, 50-60Hz EZ201A : 220-240V~, 1.3A, 50-60Hz
Dimensions	When in use : 1415 mm(W) × 655 mm(D) × 665 mm(H) ($55^{23}/_{32}$"(W) × $25^{25}/_{32}$"(D) × $26^{3}/_{16}$"(H)) When in storage : 780 mm(W) × 655 mm(D) × 665 mm(H) ($30^{23}/_{32}$"(W) × $25^{25}/_{32}$"(D) × $26^{3}/_{16}$"(H))
Weight	Approx. 100 kg (220lb)
Safety Standard	IEC 60950-1 compliant, Indoor, pollution degree 2*1, At altitudes of 2000m or lower

Note:

- The specifications are subject to change without prior notice.

*1 The pollution degree of the usage environment due to dirt and dust in the air. Degree “2” corresponds to a general indoor environment.

REG-LL_EN.book Page 130 Wednesday, September 14, 2011 12:03 PM

Feature List

Feature	EZ391/EZ371/EZ331/ EZ301	EZ231/EZ221/EZ201
Standard Reproduction Ratio	O	O
Zoom	O	NA
Dot process	O	NA
Scanning level (five manually variable steps)	O	O
Scanning level (auto)	O	O
Book shadow edit	O	O
Programed Printing	O	O
2-Up printing	O	O
Ink Saving	O	O
Pencil	O	O
Custom Setting mode	O	O
Confidential mode	O	O
Auto idling	O	O
Idling (manual)	O	O
Energy Saving mode	O	O
Auto-Process	O	O
Print speed	O	O
Print density	O	NA
Paper Jumping Wing Adjustment	O	NA
Paper Arranger	O	NA
Corrugator	NA	O
Direct Print	Optional	Optional

REG-LL_EN.book Page 131 Wednesday, September 14, 2011 12:03 PM

REG-LL_EN.book Page 132 Wednesday, September 14, 2011 12:03 PM

Index

Symbols

* Key 8
+ Key 9
× Key 9

Numerics

1:1 Key 10, 37
2-Up Indicator 10, 44
2-Up Key 10, 44
2-Up Printing 41
2-Up Printing Interval Time 67

A

AC inlet 7
ADF Original Guides 7
ADF Original Receiving Tray 7
ADF Original Release Dial 106
ADF Original Release Lever 7, 106
Administrator Registration 78
Appendixes 122
Auto Clear Time 67
Auto Document Feeder AF-VI 122
Auto Idling 64
Auto Idling Time 67
Auto Scanning Level Adjustment Indicator 10
Auto Scanning Level Adjustment Key 10
Auto-Process 46
Auto-Process Indicator 8, 46
Auto-Process Key 8, 46

B

Basic Operational Flow 28
Basic Operations 26, 29
Beep Sound 68
Book Indicator 10, 40
Book Key 10, 40
Book Shadow Edit 40
Book Shadow Editing 66
Book Shadow Editing Center Width 66

C

C Key 8
Call Service Indicator 102, 109
Card Feed Kit 122
Center Erasure 40
Check Error Display 102
Check Error Display Indication 8, 102
Check Settings Indicator 102, 107
Cleaning 98
Cleaning Safety Guide 98
Closing the Paper Feed Tray 21
Color Drum (Cylinder) 122
Computer Connection 14
Computer-generated Data Printing 32
Confidential Indicator 11, 65
Confidential Key 11, 65
Confidential Mode 65
Connection Method 14
Consumable Replacement and Discard 88
Consumables 27
Control Panel 8
Corrugator 24
Count Clearing 83
Counter 7
Create User 78
Custom Indicator 11, 73, 75
Custom key 11, 73, 75
Custom Setting Mode 66

D

Depleted Consumable Discard 95
Disable 81
Dot Process 36
Dot Screen Key 10, 36
Dot Screening 36
Dot Screening Indicator 10, 36
Duo Mode 34

E

ECO mode 69
Ejection Hook 100, 104
Empty Disposal Box Indicator 102, 109
Energy Saving Mode 67
Energy Saving Mode Wait time 67
Enlargement 37
Envelope Feed Kit 122
Error Location Indicator 102
Error Number Display 8, 102
Error Type Indicator 102

F

Feature List 130
Feed Tray Ascent/Descent Button 7, 21
Feed Tray Paper Guide 20
Feed Tray Paper Guide Lock Lever 7, 20
Feed Tray Paper Guides 7
Flange 91
Free Reproduction Size Display 10
Free Reproduction Size Ratio 37, 42
Front Cover 7
Function and Name of Each Part 6

G

Glass Platen 7, 99
Group Number 79
Grouping 52

H

H Number Display 110
Horizontal Print Position 50
Horizontal Print Position Adjustment Dial 7, 50

REG-LL_EN.book Page 133 Wednesday, September 14, 2011 12:03 PM

I

i fit indicator 8, 102, 110
Idling 64
Idling Indicator 11, 64
Idling Key 11, 64
Image Processing Mode 34
Image Processing Selection Indicator 10
Image Processing Selection Key 10
Initial Setting Restoration 72
Initial Settings 66
Ink Cap Holder 7, 89
Ink Cartridge 7, 88
Ink Cartridge Replacement 88
Ink Handling 27
Ink Saving 47
Ink Saving Indicator 10, 47
Ink Saving Key 10, 47
Installation 12
Interface Indicator 11, 32
Interface Key 11, 32
Introduction to Machine 6
IP Address 71, 75
Item No. 66

J

Jam Indicator 102
Job Separation 68
Job Separator 53
Job Separator IV 122

K

Key Card Counter IV 122

L

Line Mode 34
Location of Caution Label 27

M

Machine Handling 26
Main Control Panel 8
Maintenance 99
Maintenance Call Indicator 102, 109
Management ON/OFF 80
Master Disposal Box 93
Master Disposal Box Handle 93
Master Disposal Box Handling 93
Master Guide Flap 7, 91
Master Replacement 90
Master Roll 7, 90
Master Roll Holder 7, 90
Master-Making Key 8
Master-Making Unit 7, 90
Master-Making Unit Cover 7, 90
Master-Making Unit Cover Lever 90
Master-Making Unit Handle 7
Master-Making Unit Release Button 7, 90
Minimum Print Quantity 68
Multi-Page Mode 53

N

Number of sets 55

O

Operation Environment 26
Operation Safety Guide 26
Option 122
Original 18
Original Margin 19
Original Pad 99
Original Restrictions 19
Original Size and Weight Restrictions 18

P

P Indicator 8, 54
P Key 8, 54
Paper Arranger 22
Paper Arranger Knob 7, 22
Paper Document and Book Printing 29
Paper Feed Pressure Adjustment Lever 7, 20
Paper Feed Tray 7, 20
Paper Feed Tray Setting 20
Paper Finish 67
Paper Jam Indicator 103
Paper Jump Wing 7
Paper Jumping Wing 23
Paper Jumping Wing Adjustment Dial 7, 23
Paper Receiving Tray 7, 22
Paper Receiving Tray Setting 22
Paper Stopper 7, 22
Pencil 35
Pencil Mode Indicator 10, 35
Pencil Mode Key 10, 35
Photo Mode 34
PIN code 79
PIN code-input 31
Platen Cover 7
Power Connection 13
Power Switch 7
Preparation before Printing 20
Preparation before use 12
Pressure Roller 100
Print Density Adjustment 49
Print Density Adjustment Indicator 8
Print Density Adjustment Key 8, 49
Print Drum (Cylinder) 7, 96
Print Drum (Cylinder) Handle 7, 96
Print Drum (Cylinder) Pullout and Installation 96
Print Drum (Cylinder) Release Button 7, 96
Print Key 8
Print Paper 16
Print Paper Handling 17
Print Paper Setting 20
Print Paper Size and Weight Restrictions 16
Print Paper Storage Environment 17

REG-LL_EN.book Page 134 Wednesday, September 14, 2011 12:03 PM

Print Position Adjustment 50
Print Position Adjustment Indicator 8
Print Position Adjustment Key 8, 50
Print Position Center Key 8, 50
Print Quantity Display 8
Print Quantity Key 8
Print Speed Adjustment 51
Print Speed Adjustment Indicator 8
Print Speed Adjustment Key 8, 51
Printer Exterior 101
Program 52
Program A 52, 54
Program B 52, 53, 57
Progress Arrow 8
Proof 48
Proof Key 9, 48
Push Out Lever 93

R

Receiving Tray Paper Guide 22
Receiving Tray Paper Guides 7
Reduction 37
Replace Ink Cartridge Indicator 102, 109
Replace Master Roll Indicator 90, 102, 109
Reproduction Size Selection Key 10, 37, 38
Reservation Period 33, 68
Reset Key 9
RISO COPY COUNT VIEWER 15
RISO Network Card 122
RISO PC Interface Card USB2.0 .....14, 122
RISO Printer Driver 15
RISO USB PRINT MANAGER 15
RISO Utility Software 15

S

Safety Guide 12
Scanner Glass 100
Scanning Level Adjustment 39
Scanning Level Adjustment Key 10
Semi-Auto(ADF unit) 68
Separation Hook 100, 104
Single Page Mode 52
Software Installation 15
Specifications 123
Stand 122
Standard 37
Start Key 9
Stop Key 9
Sub Control Panel 10

T

Thermal Print Head 7
Troubleshooting 102
Troubleshooting Tips 112
Two-original (side-by-side) Printing 41

U

Upper Limit of Count 82
User Management Function Clearing 87
User Number 78
User Registration 78

V

Vertical Position 50

W

Wake-up Key 8
White Roller 100
Wide Stacking Tray 122

Z

Zoom Key 10, 38
Zoom Ratio 38